JVC

SERVICE MANUAL

COLOUR VIDEO MONITOR

BASIC CHASSIS
S1

TM-H1950CG/E
TM-H1950CG/U

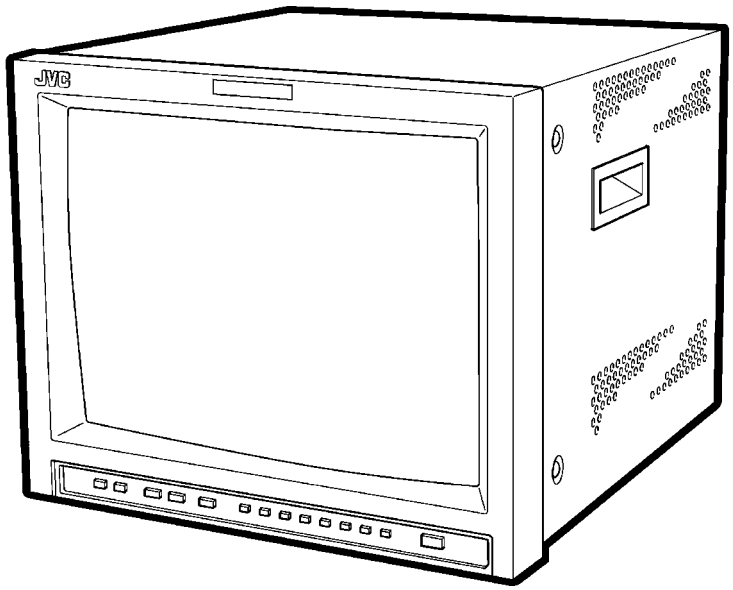

CONTENTS

■ SPECIFICATIONS ····· 2
★ OPERATING INSTRUCTIONS (APPENDIX) ····· 1-1
■ SAFETY PRECAUTIONS ····· 3
■ SPECIFIC SERVICE INSTRUCTIONS ····· 6
■ SERVICE ADJUSTMENTS ····· 12
★ STANDARD CIRCUIT DIAGRAM (APPENDIX) ····· 2-1
■ PARTS LIST ····· 39

COPYRIGHT © 2002 VICTOR COMPANY OF JAPAN, LTD.

No.51961
Jun. 2002

SPECIFICATIONS

Item		Content
Dimension (W× H× D)		440mm × 375mm × 496mm / 17-3/8" × 14-7/8" × 19-5/8"
Mass		25.6kg / 56.3lbs
Colour system		PAL / NTSC 3.58
Picture tube		19inch square type 49cm / 19" measured diagonally in-line gun, trio–dot type, dot pitch 0.27mm
Effective screen size		365.8mm × 274.3mm (W × H) / 457.2mm (Diagonal) 14-5/8" × 10-7/8" (W × H) / 18" (Diagonal)
Scanning frequency		(H)15.734 kHz (NTSC) 15.625 kHz (PAL) (V)59.94 Hz (NTSC) 50Hz (PAL)
Horizontal resolution		750 TV line or more
Colour Temperature		6500K ; x = 0.313, y = 0.329 9300k ; x = 0.283, y = 0.297
Power requirements		230V AC, 50/60 Hz [TM-H1950CG/E] 120V AC, 50/60 Hz [TM-H1950CG/U]
High Voltage		24.7kV～27.3kv [at zero beam current]
Power consumption		0.9A [TM-H1950CG/E] 1.3A [TM-H1950CG/U]
Input / output terminal		
Input A	**Composite video signal**	BNC connector × 2, 1Vp-p, 75Ω , negative sync 1 bridge-connected output possible with automatic termination
	Audio signal	Monaural, RCA pin × 1, 500mV(rms) High-impedance, 1-bridge-connected output posible
Input B	**Composite video signal**	BNC connector × 2, 1Vp-p, 75Ω , negative sync 1 bridge-connected output possible with automatic termination
	Y/C separate signal (S input priority)	Mini Din 4pin × 2, 1 bridge-connected output possible with automatic termination Y : 1.0Vp-p, 75Ω C : NTSC burst 0.286Vp-p, 75Ω PAL burst 0.3Vp-p, 75Ω
	Audio signal	Monaural, RCA pin × 1, 500mV(rms) High-impedance, 1-bridge-connected output posible
	Card slot	COMPONENT / RGB input card (IF-C01COM avairable) SD-SDI input card (IF-C01SD avairable)
Remote control input		D-sub 15pin Make or TRG can switched in MENU
Audio power output		1W (Monaural)
Speaker		8cm round × 1, impedance 8Ω
Operation temperature		5℃～40℃ (41～104° F)
Operation humidity		20～80% (non-condensing)

Design & specifications are subject to change without notice.

SAFETY PRECAUTIONS

For District of power requirement is 120V AC (Mainly North America)

1. The design of this product contains special hardware, many circuits and components specially for safety purposes. For continued protection, no changes should be made to the original design unless authorized in writing by the manufacturer. Replacement parts must be identical to those used in the original circuits. Service should be performed by qualified personnel only.
2. Alterations of the design or circuitry of the products should not be made. Any design alterations or additions will void the manufacturer's warranty and will further relieve the manufacturer of responsibility for personal injury or property damage resulting therefrom.
3. Many electrical and mechanical parts in the products have special safety-related characteristics. These characteristics are often not evident from visual inspection nor can the protection afforded by them necessarily be obtained by using replacement components rated for higher voltage, wattage, etc. Replacement parts which have these special safety characteristics are identified in the parts list of Service manual. **Electrical components having such features are identified by shading on the schematics and by (⚠) on the parts list in Service manual.** The use of a substitute replacement which does not have the same safety characteristics as the recommended replacement part shown in the parts list of Service manual may cause shock, fire, or other hazards.
4. **Use isolation transformer when hot chassis.**
   The chassis and any sub-chassis contained in some products are connected to one side of the AC power line. An isolation transformer of adequate capacity should be inserted between the product and the AC power supply point while performing any service on some products when the HOT chassis is exposed.
5. **Don't short between the LIVE side ground and ISOLATED (NEUTRAL) side ground or EARTH side ground when repairing.**
   Some model's power circuit is partly different in the GND. The difference of the GND is shown by the LIVE : (⊥) side GND, the ISOLATED(NEUTRAL) : (⏚) side GND and EARTH : (⏚) side GND. Don't short between the LIVE side GND and ISOLATED(NEUTRAL) side GND or EARTH side GND and never measure with a measuring apparatus (oscilloscope etc.) the LIVE side GND and ISOLATED(NEUTRAL) side GND or EARTH side GND at the same time.
   If above note will not be kept, a fuse or any parts will be broken.
6. If any repair has been made to the chassis, it is recommended that the B1 setting should be checked or adjusted (See ADJUSTMENT OF B1 POWER SUPPLY).
7. The high voltage applied to the picture tube must conform with that specified in Service manual. Excessive high voltage can cause an increase in X-Ray emission, arcing and possible component damage, therefore operation under excessive high voltage conditions should be kept to a minimum, or should be prevented. If severe arcing occurs, remove the AC power immediately and determine the cause by visual inspection (incorrect installation, cracked or melted high voltage harness, poor soldering, etc.). To maintain the proper minimum level of soft X-Ray emission, components in the high voltage circuitry including the picture tube must be the exact replacements or alternatives approved by the manufacturer of the complete product.
8. Do not check high voltage by drawing an arc. Use a high voltage meter or a high voltage probe with a VTVM. Discharge the picture tube before attempting meter connection, by connecting a clip lead to the ground frame and connecting the other end of the lead through a 10kΩ 2W resistor to the anode button.
9. When service is required, observe the original lead dress. Extra precaution should be given to assure correct lead dress in the high voltage circuit area. Where a short circuit has occurred, those components that indicate evidence of overheating should be replaced. Always use the manufacturer's replacement components.
10. **Isolation Check**
    (Safety for Electrical Shock Hazard)
    After re-assembling the product, always perform an isolation check on the exposed metal parts of the cabinet (antenna terminals, video/audio input and output terminals, Control knobs, metal cabinet, screwheads, earphone jack, control shafts, etc.) to be sure the product is safe to operate without danger of electrical shock.
    (1) **Dielectric Strength Test**
    The isolation between the AC primary circuit and all metal parts exposed to the user, particularly any exposed metal part having a return path to the chassis should withstand a voltage of 1100V AC (r.m.s.) for a period of one second.
    (. . . . Withstand a voltage of 1100V AC (r.m.s.) to an appliance rated up to 120V, and 3000V AC (r.m.s.) to an appliance rated 200V or more, for a period of one second.)
    This method of test requires a test equipment not generally found in the service trade.
    (2) **Leakage Current Check**
    Plug the AC line cord directly into the AC outlet (do not use a line isolation transformer during this check.). Using a "Leakage Current Tester", measure the leakage current from each exposed metal part of the cabinet, particularly any exposed metal part having a return path to the chassis, to a known good earth ground (water pipe, etc.). Any leakage current must not exceed 0.5mA AC (r.m.s.).
    However, in tropical area, this must not exceed 0.2mA AC (r.m.s.).
    ● **Alternate Check Method**
    Plug the AC line cord directly into the AC outlet (do not use a line isolation transformer during this check.). Use an AC voltmeter having 1000 ohms per volt or more sensitivity in the following manner. Connect a 1500Ω 10W resistor paralleled by a 0.15μF AC-type capacitor between an exposed metal part and a known good earth ground (water pipe, etc.). Measure the AC voltage across the resistor with the AC voltmeter. Move the resistor connection to each exposed metal part, particularly any exposed metal part having a return path to the chassis, and measure the AC voltage across the resistor. Now, reverse the plug in the AC outlet and repeat each measurement. Any voltage measured must not exceed 0.75V AC (r.m.s.). This corresponds to 0.5mA AC (r.m.s.).
    However, in tropical area, this must not exceed 0.3V AC (r.m.s.). This corresponds to 0.2mA AC (r.m.s.).

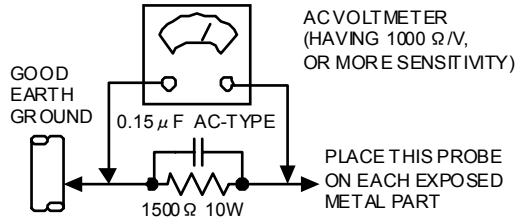

11. **High voltage hold down circuit check.**
    After repair of the high voltage hold down circuit, this circuit shall be checked to operate correctly.
    See item "**How to check the high voltage hold down circuit**".

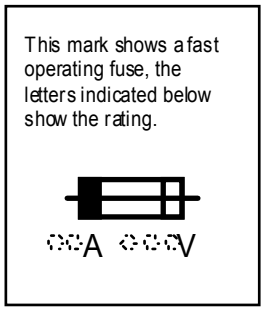

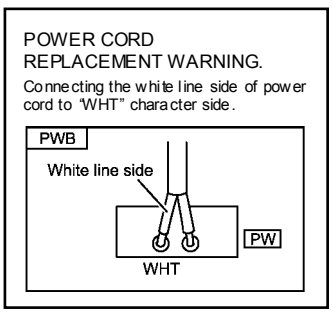

SAFETY PRECAUTIONS

For District of power requirement is 230V~ 240V AC (Europe, Asia and Oceania)

1. The design of this product contains special hardware, many circuits and components specially for safety purposes. For continued protection, no changes should be made to the original design unless authorized in writing by the manufacturer. Replacement parts must be identical to those used in the original circuits. Service should be performed by qualified personnel only.

2. Alterations of the design or circuitry of the products should not be made. Any design alterations or additions will void the manufacturer's warranty and will further relieve the manufacturer of responsibility for personal injury or property damage resulting therefrom.

3. Many electrical and mechanical parts in the products have special safety-related characteristics. These characteristics are often not evident from visual inspection nor can the protection afforded by them necessarily be obtained by using replacement components rated for higher voltage, wattage, etc. Replacement parts which have these special safety characteristics are identified in the parts list of Service manual. **Electrical components having such features are identified by shading on the schematics and by (⚠) on the parts list in Service manual.** The use of a substitute replacement which does not have the same safety characteristics as the recommended replacement part shown in the parts list of Service manual may cause shock, fire, or other hazards.

4. **Don't short between the LIVE side ground and ISOLATED (NEUTRAL) side ground or EARTH side ground when repairing.**
   Some model's power circuit is partly different in the GND. The difference of the GND is shown by the LIVE : (⊥) side GND, the ISOLATED(NEUTRAL) : (⏚) side GND and EARTH : (⏚) side GND. Don't short between the LIVE side GND and ISOLATED(NEUTRAL) side GND or EARTH side GND and never measure with a measuring apparatus (oscilloscope etc.) the LIVE side GND and ISOLATED(NEUTRAL) side GND or EARTH side GND at the same time.
   If above note will not be kept, a fuse or any parts will be broken.

5. If any repair has been made to the chassis, it is recommended that the B1 setting should be checked or adjusted (See ADJUSTMENT OF B1 POWER SUPPLY).

6. The high voltage applied to the picture tube must conform with that specified in Service manual. Excessive high voltage can cause an increase in X-Ray emission, arcing and possible component damage, therefore operation under excessive high voltage conditions should be kept to a minimum, or should be prevented. If severe arcing occurs, remove the AC power immediately and determine the cause by visual inspection (incorrect installation, cracked or melted high voltage harness, poor soldering, etc.). To maintain the proper minimum level of soft X-Ray emission, components in the high voltage circuitry including the picture tube must be the exact replacements or alternatives approved by the manufacturer of the complete product.

7. Do not check high voltage by drawing an arc. Use a high voltage meter or a high voltage probe with a VTVM. Discharge the picture tube before attempting meter connection, by connecting a clip lead to the ground frame and connecting the other end of the lead through a 10kΩ 2W resistor to the anode button.

8. When service is required, observe the original lead dress. Extra precaution should be given to assure correct lead dress in the high voltage circuit area. Where a short circuit has occurred, those components that indicate evidence of overheating should be replaced. Always use the manufacturer's replacement components.

9. **Isolation Check**
   (Safety for Electrical Shock Hazard)
   After re-assembling the product, always perform an isolation check on the exposed metal parts of the cabinet (antenna terminals, video/audio input and output terminals, Control knobs, metal cabinet, screwheads, earphone jack, control shafts, etc.) to be sure the product is safe to operate without danger of electrical shock.

(1) **Dielectric Strength Test**
The isolation between the AC primary circuit and all metal parts exposed to the user, particularly any exposed metal part having a return path to the chassis should withstand a voltage of 3000V AC (r.m.s.) for a period of one second.
(. . . . Withstand a voltage of 1100V AC (r.m.s.) to an appliance rated up to 120V, and 3000V AC (r.m.s.) to an appliance rated 200V or more, for a period of one second.)
This method of test requires a test equipment not generally found in the service trade.

(2) **Leakage Current Check**
Plug the AC line cord directly into the AC outlet (do not use a line isolation transformer during this check.). Using a "Leakage Current Tester", measure the leakage current from each exposed metal part of the cabinet, particularly any exposed metal part having a return path to the chassis, to a known good earth ground (water pipe, etc.). Any leakage current must not exceed 0.5mA AC (r.m.s.).
However, in tropical area, this must not exceed 0.2mA AC (r.m.s.).

● **Alternate Check Method**
Plug the AC line cord directly into the AC outlet (do not use a line isolation transformer during this check.). Use an AC voltmeter having 1000 ohms per volt or more sensitivity in the following manner. Connect a 1500Ω 10W resistor paralleled by a 0.15μF AC-type capacitor between an exposed metal part and a known good earth ground (water pipe, etc.). Measure the AC voltage across the resistor with the AC voltmeter. Move the resistor connection to each exposed metal part, particularly any exposed metal part having a return path to the chassis, and measure the AC voltage across the resistor. Now, reverse the plug in the AC outlet and repeat each measurement. Any voltage measured must not exceed 0.75V AC (r.m.s.). This corresponds to 0.5mA AC (r.m.s.).
However, in tropical area, this must not exceed 0.3V AC (r.m.s.). This corresponds to 0.2mA AC (r.m.s.).

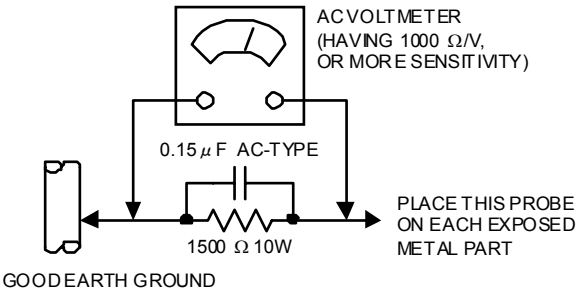

SAFETY PRECAUTIONS

1. The design of this product contains special hardware and many circuits and components specially for safety purposes. For continued protection, no changes should be made to the original design unless authorized in writing by the manufacturer. Replacement parts must be identical to those used in the original circuits. Service should be performed by qualified personnel only.

2. Alterations of the design or circuitry of the product should not be made. Any design alterations or additions will void the manufacturer's warranty and will further relieve the manufacturer of responsibility for personal injury or property damage resulting therefrom.

3. Many electrical and mechanical parts in the product have special safety-related characteristics. These characteristics are often not evident from visual inspection nor can the protection afforded by them necessary be obtained by using replacement components rated for higher voltage, wattage, etc. Replacement parts which have these special safety characteristics are identified in the Parts List of Service Manual. Electrical components having such features are identified by shading on the schematics and by (⚠) on the Parts List in the Service Manual. The use of a substitute replacement which does not have the same safety characteristics as the recommended replacement part shown in the Parts List of Service Manual may cause shock, fire, or other hazards.

WARNING

1. The equipment has been designed and manufactured to meet international safety standards.
2. It is the legal responsibility of the repairer to ensure that these safety standards are maintained.
3. Repairs must be made in accordance with the relevant safety standards.
4. It is essential that safety critical components are replaced by approved parts.
5. If mains voltage selector is provided, check setting for local voltage.

For UK and Hong Kong

4. The leads in the products are routed and dressed with ties, clamps, tubing's, barriers and the like to be separated from live parts, high temperature parts, moving parts and / or sharp edges for the prevention of electric shock and fire hazard. When service is required, the original lead routing and dress should be observed, and it should be confirmed that they have been returned to normal, after re-assembling.

SPECIFIC SERVICE INSTRUCTIONS

DISASSEMBLY PROCEDURE

CAUTION

Even with the power switch turn off, some parts of in this unit are live. Be sure to disconnect the power plug from the AC outlet before disassembly and reassembly.

REMOVING THE TOP COVER

1. As shown in Fig.4, remove the **8** screws marked Ⓐ .
2. Slightly spread the bottom of the top cover.
3. Shift the cover rearward and raise it upward to remove it.

REMOVING THE REAR PANEL

● After removing the top cover.

1. Remove the **8** screws marked Ⓑ .
2. Remove the screw marked Ⓒ attached the FBT.
3. Remove the screw maarked Ⓓ attached the SIGNAL PWB with the terminal bracket.
4. Remove the **5** screws marked Ⓔ attached the terminals with the terminal bracket.
5. Remove the screws marked Ⓕ and Ⓖ attached the slot holder with terminal bracket.
6. Remove the screw marked Ⓗ attached the terminal bracket with the chassis base.
7. Remove the **2** hexagonal screws marked Ⓙ attached the D-SUB terminal with the terminal bracket.
8. As shown in Fig.1, lift the rear panel and remove the claw marked Ⓚ from the terminal bracket.
9. Shift the top portion of the rear panel slightly rearward and raise it upward to remove it.

REMOVING THE TERMINAL BRACKET

● Remove the top cover and rear panel.

1. Pull the PW connector out from the MAIN PWB, connected betweeen the main power switch and MAIN PWB.
2. As shown in Fig.2, lift the slot holder slightly, and remove the claw marked Ⓛ attached slot holder with the terminal bracket.
3. As shown in Fig.3, raise the claw marked Ⓜ positioned back side of the chassis base, and lift the terminal bracket from the chassis base.
4. Slightly shift the terminal bracket rearward and raise it upward to remove it.

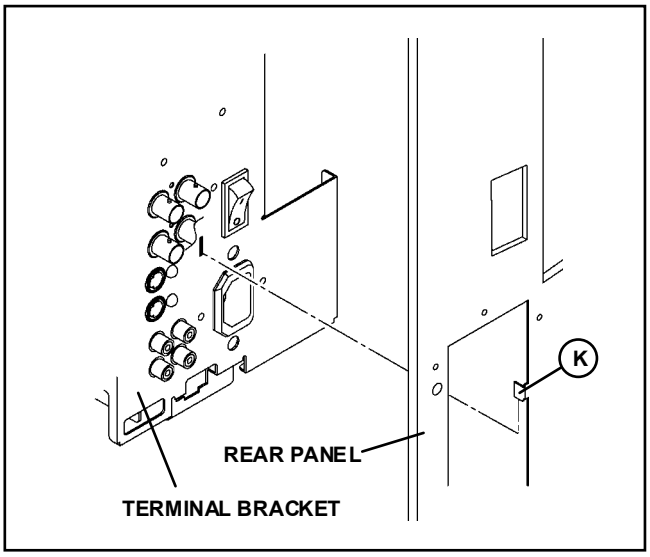

Fig.1

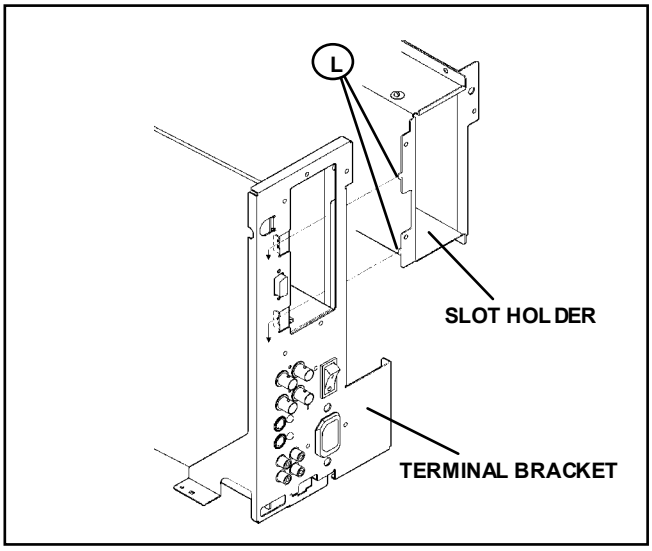

Fig.2

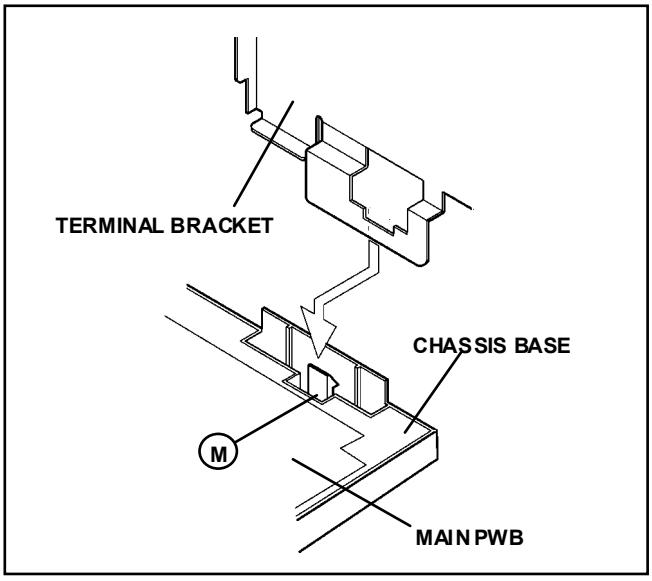

Fig.3

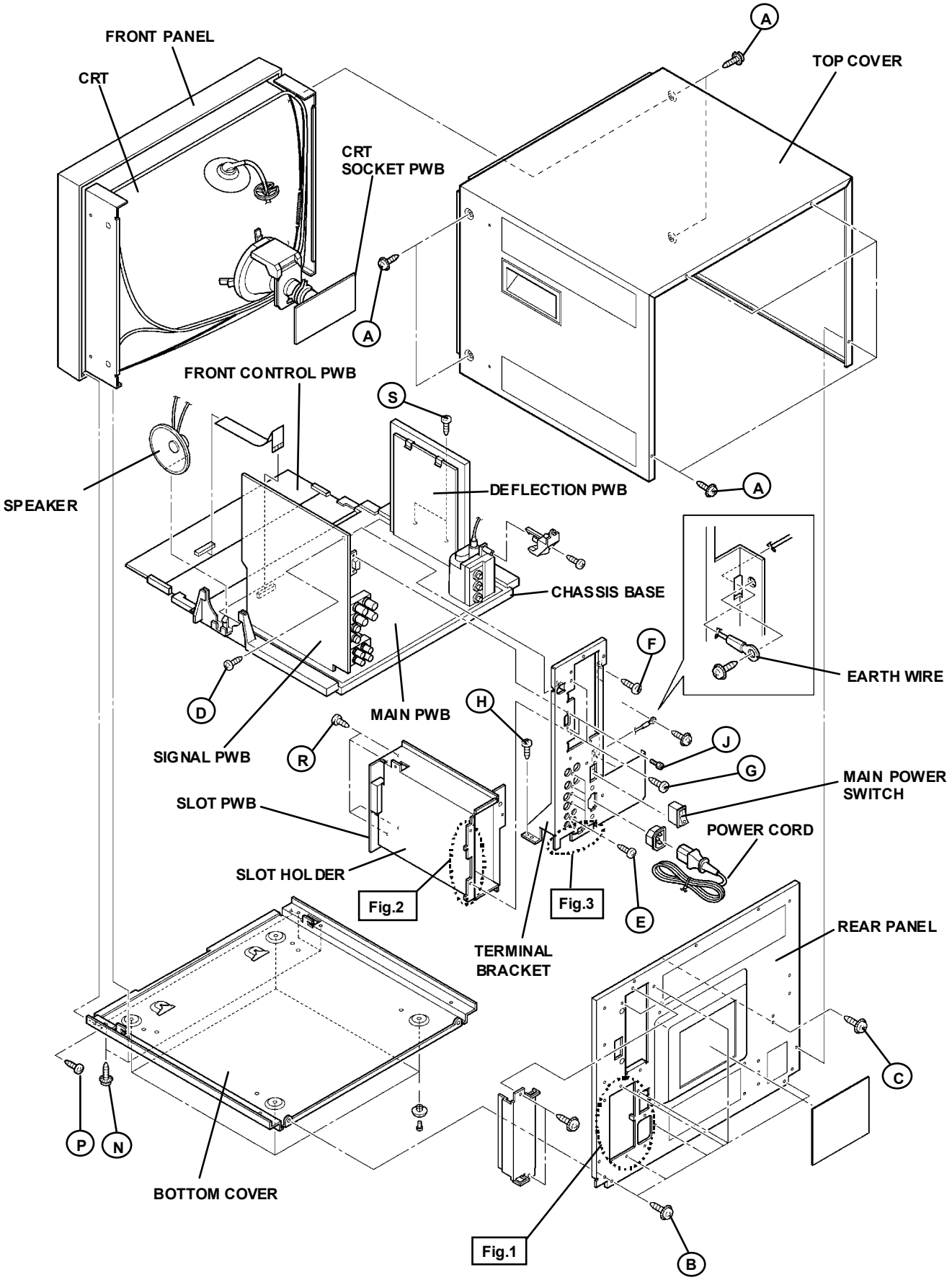
FRONT PANEL
CRT
CRT SOCKET PWB
TOP COVER
A
FRONT CONTROL PWB
S
SPEAKER
DEFLECTION PWB
CHASSIS BASE
EARTH WIRE
F
D
MAIN PWB
H
R
SIGNAL PWB
J
G
MAIN POWER SWITCH
SLOT PWB
POWER CORD
SLOT HOLDER
Fig.2
Fig.3
E
TERMINAL BRACKET
REAR PANEL
C
P
N
BOTTOM COVER
Fig.1
B

Fig.4

REMOVING THE SLOT PWB AND SLOT HOLDER

- Remove the top cover, rear panel and terminal bracket.

1. Dettach the connector connected SLOT PWB and SIGNAL PWB, then remove the SLOT PWB with slot holder.

REMOVING THE CHASSIS BASE

- Remove the top cover, rear panel and terminal bracket.

1. Fall the unit down side ways as able to see the bottom side.
2. Lift the back side of the chassis base slightly, and separate it from bottom cover.
3. Raise the **2** claws positioned bottom of the chassis base, and dettach the chassis base from bottom cover.
4. Then pull the chassis base out to rearward.

REMOVING THE SLOT PWB

- Remove the SLOT PWB with slot holder from SIGNAL PWB.

1. Remove the **4** screws marked Ⓡ .
2. Then remove the SLOT PWB from slot holder.

REMOVING THE DEFLECTION PWB

- Remove the top cover.

1. Remove the **2** screws marked Ⓢ .
2. Dettach the connector connected DEFLECTION PWB and MAIN PWB.
3. Then remove the DEFLECTION PWB.

REMOVING THE BOTTOM COVER

- Remove the chasssis base.

1. Set the CRT front surfase downward, and stand the bottom cover to facing it toward you.
   At this time, care must be exercised not to damage the front panel and CRT surface.
2. Remove the **4** screws marked Ⓝ and **2** screws marked Ⓟ .
3. While spreading the bottom cover to the bottom side, pull it out to rearward to remove it.

REMOVING THE SPEAKER

- Remove the top cover.

1. Slightly spread the claws of the speaker holder, and pull up the speaker to remove it.

A METHOD OF ERECTING THE CHASSIS BASE

To check the PW board from back side.

(1) Remove the chassis base and the other PW boards.

(2) Erect the chassis base vertically so that you can easily check the PW board from back side.

CAUTION

- Before turning on power, make sure that the earth wire properly connected to the terminal bracket, which is attached the main power switch and AC inlet. (Fig.5)
- And make sure that the CRT earth wire and the other connectors are properly connected.
- When erecting the chassis base, be careful so that there will be no contacting with the other PW board.
- Be careful while erecting the PW board, because easily fall down.

WIRE CLAMPING AND CABLE TYING

1. Be sure to clamp the wire.
2. Never remove the cable tie used for tying the wires together. Should it be inadvertently removed, be sure to tie the wires with a new cable tie.

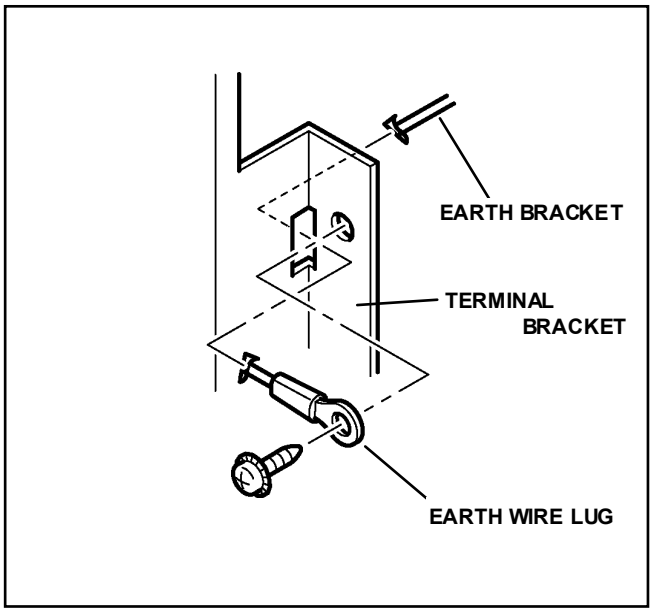

Fig.5

REPLACEMENT OF MEMORY IC

1. MEMORY IC

This model uses memory IC. In the memory IC, memorized data for correctly operating for the video-chroma, deflection and the other control circuits.

When replacing memory IC, be sure to use the IC written with the initial values of data.

2. PROCEDURE FOR REPLACING MEMORY IC

(1) Power off

Turn the power off and unplug the power plug from the AC outlet.

(2) Replace IC

Be sure to use the memory IC written with the initial setting data.

(3) Power on

Connect the power plug into the AC outlet and turn the power on.

(4) Check and set SET-UP MENU items

1) Press the **MENU** key and the **CHROMA/PHASE** key simultaneously.
2) The SET-UP MENU screen (Fig. 1) will be displayed.
3) Check the setting value of the each item of the SET-UP MENU. If value is different, select it and set the correct value.
4) Press the **MENU** key, and return to the normal screen.

(5) Check and set MENU items

Press the **MENU** key and check the setting value of the each item. If the value is different, select the item and set the correct value.

(6) Adjust the front control items

Adjust the CHROMA, PHASE, CONTRAST and BRIGHT.

Not all items can be adjusted as expected if the signal has not been input correctly in the adjustments.

(7) Confirm the items of SERVICE MENU

Confirm the each item of the SERVICE MENU. Refer to the corresponding page to operate the SERVICE MENU.

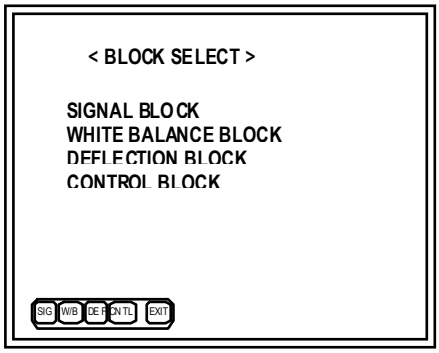

SERVICE MENU
<BLOCK SELECT> SCREEN

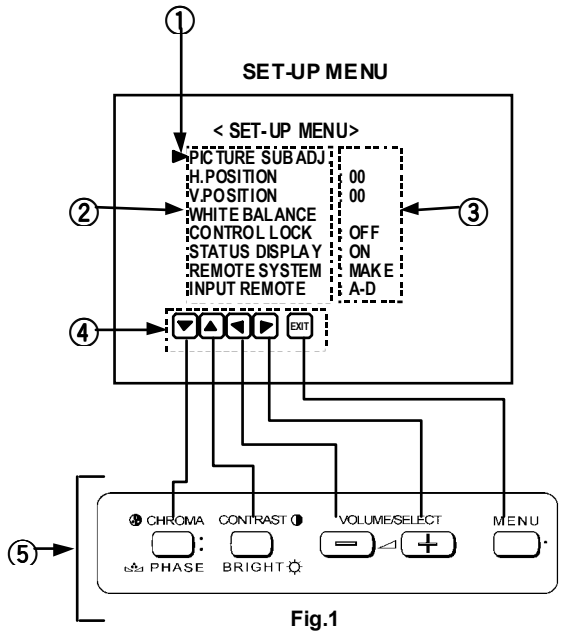

Fig.1

①CURSOR

Display with the current adjusting item. Operate with the **CHROMA/PHASE** key and **CONTRAST/BRIGHT** key.

②SETTING ITEM

The items of setting

③SETTING VALUE

Adjust each item of SET-UP MENU with the **VOLUME/ SELECT** (− or +)key.

④FUNCTION DISPLAY

When you move the cursor to select the item, the function display changes the illustration.

⑤OPERATION KEY ARRANGEMENT

In the SERVICE MENU, the original key operation by the front panel replaced with the displayed function. Accordance with the display about operate each mode.

SHIPMENT VALUE OF THE SET-UP MENU

Setting item	Setting content / Range		Shipment value
PICTURE SUB ADJ.	CONTRAST		00
	BRIGHT		00
	PHASE		00
	CHROMA		00
H. POSITION	-05 ~ +05		00
V. POSITION	-05 ~ +05		00
WHITE BALANCE	CUTOFF (R / G / B)	-20 ~ +20	00
	DRIVE (R / B)	-20 ~ +20	00
CONTROL LOCK	ON → OFF		OFF
STATUS DISPLAY	ON → OFF		ON
REMOTE SYSTEM	MAKE → TRG.		MAKE
INPUT REMOTE	A/D → A/B		A-B

SHIPMENT VALUE OF THE MENU

Setting item	Setting content / Range	Shipment value
APERTURE	00 ~ +40	00
ADJ. BAR POSI	LOWER→UPPER	LOWER
COLOUR TEMP	9300 → 6500	9300
COLOUR SYSTEM	AUTO→NTSC→AUTO→PAL	AUTO
COMPO LEVEL	-40 ~ +10	00
RUSH DELAY	STD. → SLOW	STD.

SHIPMENT SETTINGS OF FRONT PANEL CONTROLS

Control item	Shipment settings
INPUT SELECT	A
ASPECT	OFF
BLUE CHECK	OFF
COLOR OFF	OFF
UNDER SCAN	OFF
MENU	OFF
VOLUME	20
CONTRAST	00
BRIGHT	00
PHASE	00
CHROMA	00

BLOCK SELECT ITEMS

It is no requirement for adjustment about ▭ part in the table. Don't change the values.

SIGNAL BLOCK

ITEM	INPUT SIGNAL	CONTENTS
S01	VIDEO	BRIGHT
S02		CONTRAST
S03		CHROMA(PAL)
S04		CHROMA(NTSC)
S05		PHASE(NTSC)
S06	COMPONENT	CHROMA
S07	RGB	BRIGHT
S08		CONTRAST
S09	UNDER SCAN	BRIGHT
S10		CONTRAST
S11	VIDEO	PHASE(PAL)
S12	COMPONENT	PHASE
S13	VIDEO	CONT TRACKING

DEFLECTION BLOCK

ITEM	ASPECT RATIO SCAN SIZE	VERTICAL FREQUENCY	CONTENTS
D01	4:3 NORMAL SCAN	50Hz	HORIZONTAL POSITION
D02			HORIZONTAL SIZE
D03			VERTICAL POSITION
D04			VERTICAL SIZE
D05			VERTICAL LINEARITY
D06			VERTICAL S-CORRECTION
D07			E-W PARABOLA
D08			E-W CORNER

There are many mode of the DEFLECTION BLOCK except for above
DA1～DA8 (4:3 / 60Hz), DB1～DB8 (16:9 / 50Hz)
DC1～DC8 (16:9 / 60Hz)
DD1～DD8 (UNDER SCAN / 50Hz)
DE1～DE8 (UNDER SCAN / 60Hz)
DF7～DF8 (16:9 UNDER SCAN / 50Hz)
DG7～DG8 (16:9 UNDER SCAN / 60Hz)

WHITE BALANCE BLOCK

ITEM	INPUT SIGNAL	CONTENTS
W01	VIDEO COMPOSITE SIGNAL	R CUTOFF
W02		G CUTOFF
W03		B CUTOFF
W04		R DRIVE (6500K)
W05		B DRIVE (6500K)
W06		R DRIVE (9300K)
W07		B DRIVE (9300K)
W08	COMPONENT SIGNAL (Input from rear slot card)	R CUTOFF
W09		G CUTOFF
W10		B CUTOFF
W11		R DRIVE (6500K)
W12		B DRIVE (9300K)
W13		R DRIVE (6500K)
W14		B DRIVE (9300K)
W15	RGB SIGNAL (Input from rear slot card)	R CUTOFF
W16		G CUTOFF
W17		B CUTOFF
W18		R DRIVE (6500K)
W19		B DRIVE (9300K)
W20		R DRIVE (6500K)
W21		B DRIVE (9300K)
W22	UNDER SCAN	R CUTOFF
W23		G CUTOFF
W24		B CUTOFF

CONTROL BLOCK

ITEM	CONTENTS	
C01	DESTINATION (000 : For Japan, 001 : For Europe / US)	
C02	BRIGHT POINT	UPPER
C03		LOWER
C04	CONTRAST POINT	UPPER
C05		LOWER
C06	CHROMA POINT	UPPER
C07		LOWER
C08	PHASE POINT	UPPER
C09		LOWER
C10	OSD HORIZONTAL POSITION	
C11	OSD VERTICAL FREQUENCY 50Hz	
C12	OSD VERTICAL FREQUENCY 60Hz	
C13	HORIZONTAL CENTER (RGB)	
C14	HORIZONTAL CENTER (COMPONENT)	
C15	BRIGHT SERVICE	
C16	SHARPNESS CENTER	
C17	HVT H	
C18	HVT V	
C19	HVT H (UNDER SCAN)	
C20	HVT V (UNDER SCAN)	
C21	V-S.CORRECTION	
C22	TRAPEZOID	
C23	HOUR METER	
C24	RUSH DELAY	
C25	DEGAUSS DELAY TIME	
C26～C33	SLOT IDENTIFY	

SERVICE ADJUSTMENTS

BEFORE STARTING SERVICE ADJUSTMENT

1. Confirm the proper AC power voltage is being supplied.
2. Supply power to the set and measuring instruments and allow to warm up for at least 30 minutes.
3. The setting is made on basis of the initial setting values. The setting values which adjust the screen to the optimum condition can be different from the initial setting values.
4. Use care not to disturb controls and switches not mentioned in the adjustment items.

FOCUS AND SCREEN ADJUSTMENT HOLES

Because of adjusting FOCUS VR1, 2 and SCREEN VR without disassembled the monitor cabinet, there are the adjustment holes on the backside of the monitor cabinet (rear panel).

Be sure to use a non-metalic driver for adjusting there VRs. The metalic driver can cause damage by shorting.

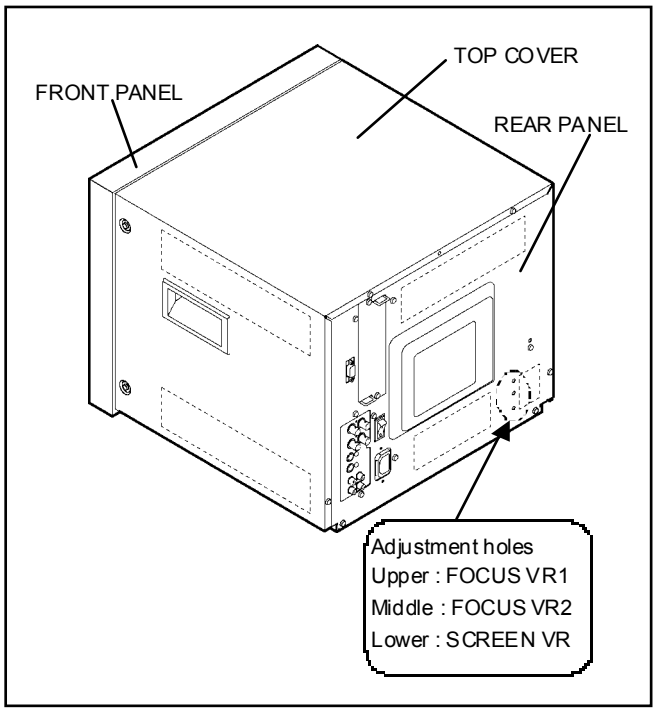

ADJUSTMENT ITEMS

BASIC ADJUSTMENT

- Checking of B1 voltage
- Checking of High voltage
- Focus adjustment

VIDEO / CHROMA CIRCUIT ADJUSTMENT

- White Balance (Low Light) adjustment
- White Balance (High Light 6500K) adjustment
- White Balance (High Light 9300K) adjustment
- Bright adjustment
- Contrast adjustment
- PAL Chroma adjustment
- PAL Phase adjustment
- NTSC 3.58 Chroma adjustment
- NTSC 3.58 Phase adjustment
- Component Chroma adjustment
- RGB Bright adjustment
- RGB Contrast adjustment

DEFLECTION CIRCUIT ADJUSTMENT

[Adjustment using 50Hz signal]

- 4:3 Horizontal center adjustment
- 4:3 Horizontal size adjustment
- 4:3 Side pincushion adjustment
- 4:3 Vertical center adjustment
- 4:3 Vertical linearity adjustment
- 4:3 Vertical size adjustment
- 16:9 Vertical size adjustment
- 16:9 Side pin cushion adjustment
- 4:3 Under scan horizontal size, horizontal center adjustment
- 4:3 Under scan side pincushion adjustment

[Adjustment using 60Hz signal]

- 4:3 Horizontal center, horizontal size, side pincushion adjustment
- 4:3 Vertical center, vertical linearity adjustment
- 16:9 Vertical center, vertical linearity adjustment
- 4:3 Under scan horizontal center, horizontal size, side pincushion adjustment
- 16:9 Under scan side pincushion adjustment

MEASURING INSTRUMENTS AND STANDARD SIGNAL

- DC voltmeter (digital voltmeter)
- High voltage meter
- Oscilloscope
- Colour temperature meter or Colour analyser
- Component / RGB input card (IF-C01COM)
- Signal generator (PAL/NTSC systems)
  The wave form of signals refer to the following figure.

STANDARD VIDEO SIGNALS FOR ADJUSTMENT

COMPOSITE VIDEO SIGNAL (PAL / NTSC colour bar)

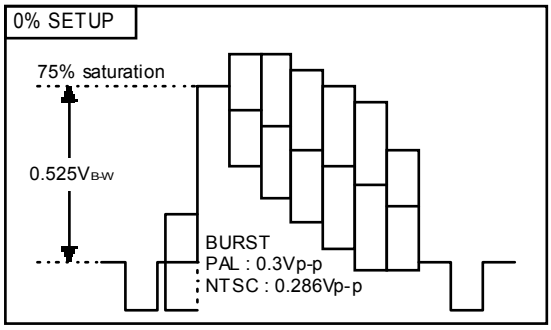

Y / C Separate signal (colour bar)

Chroma

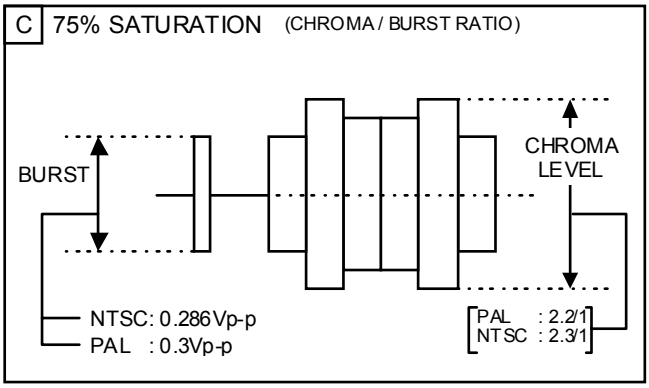

Luminance

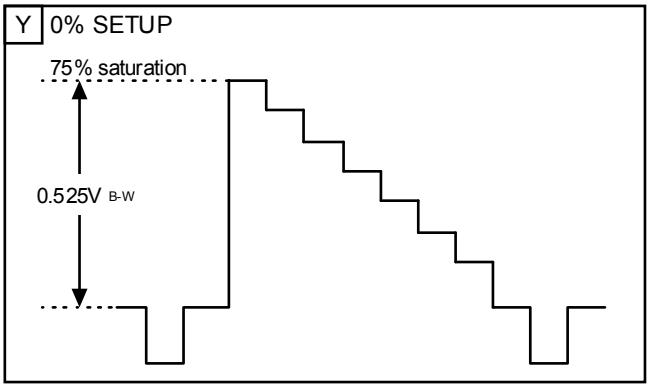

Component signal (100 / 0 / 100 / 0 Interface, 75 / 0 / 75 / 0 setup colour bar)

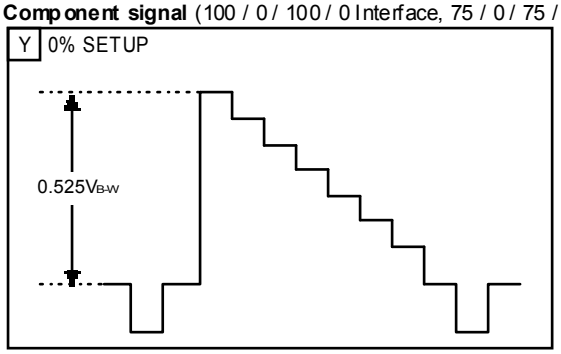

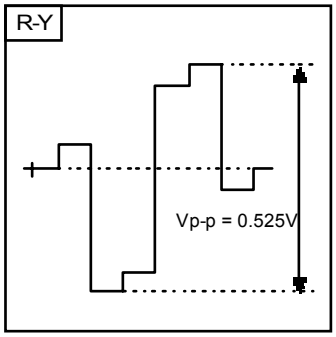

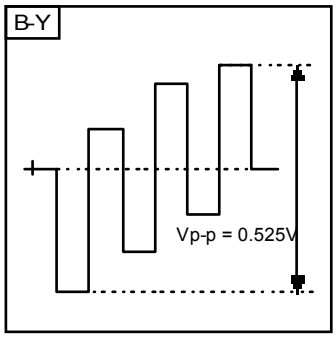

RGB signal

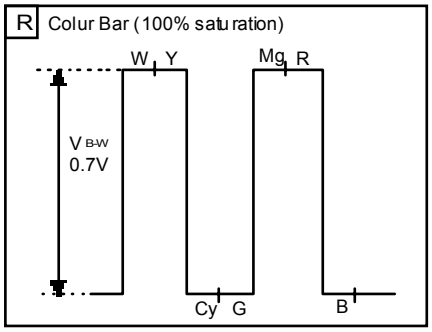

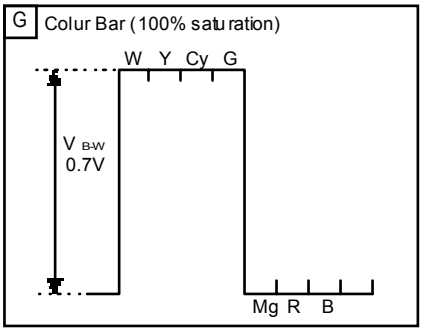

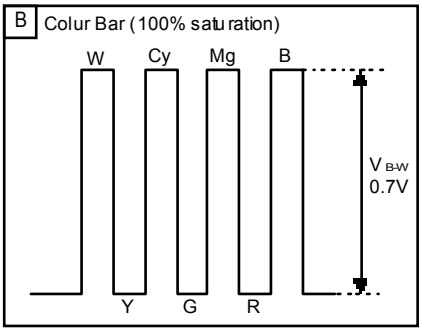

ADJUSTMENT LOCATIONS

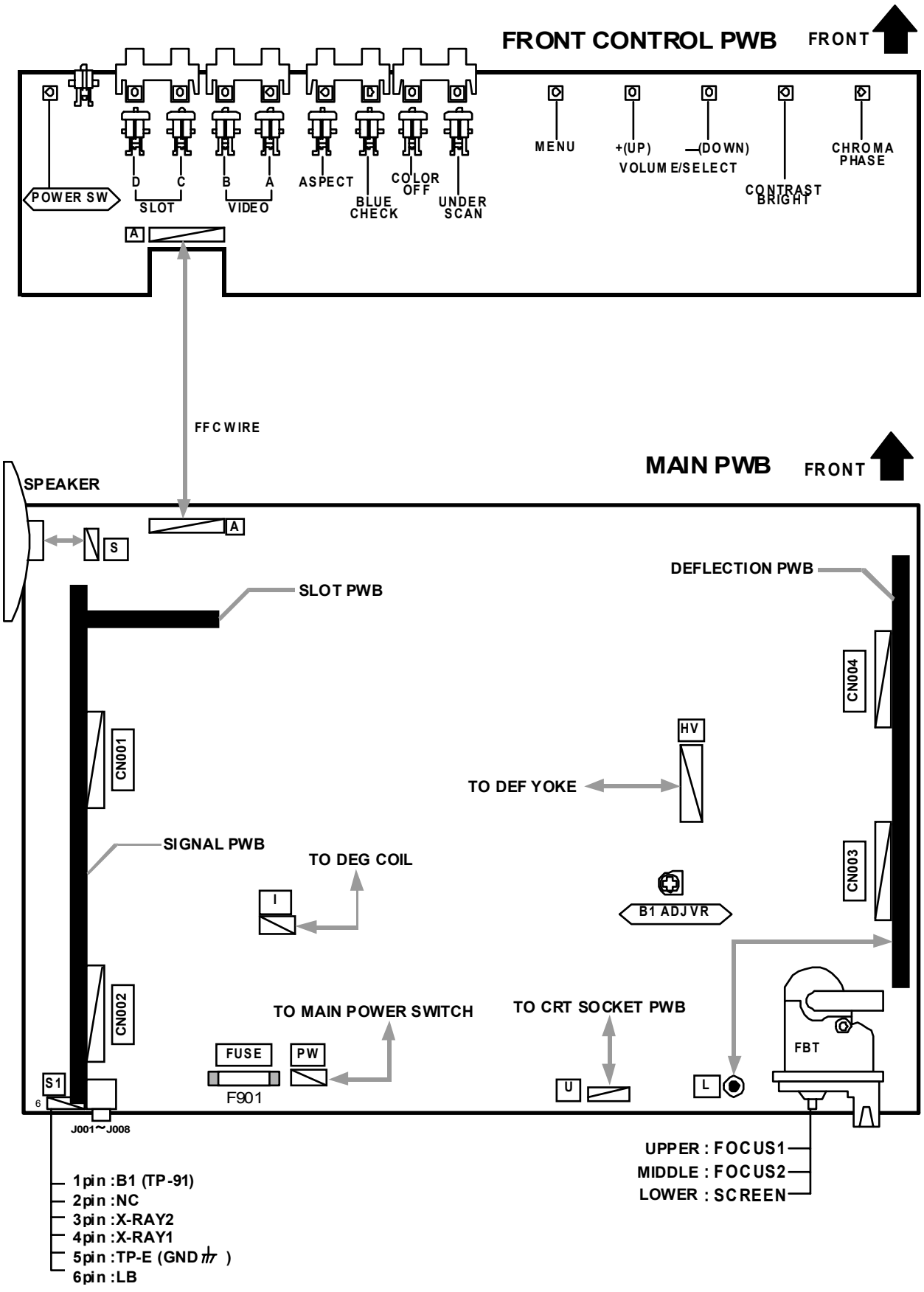

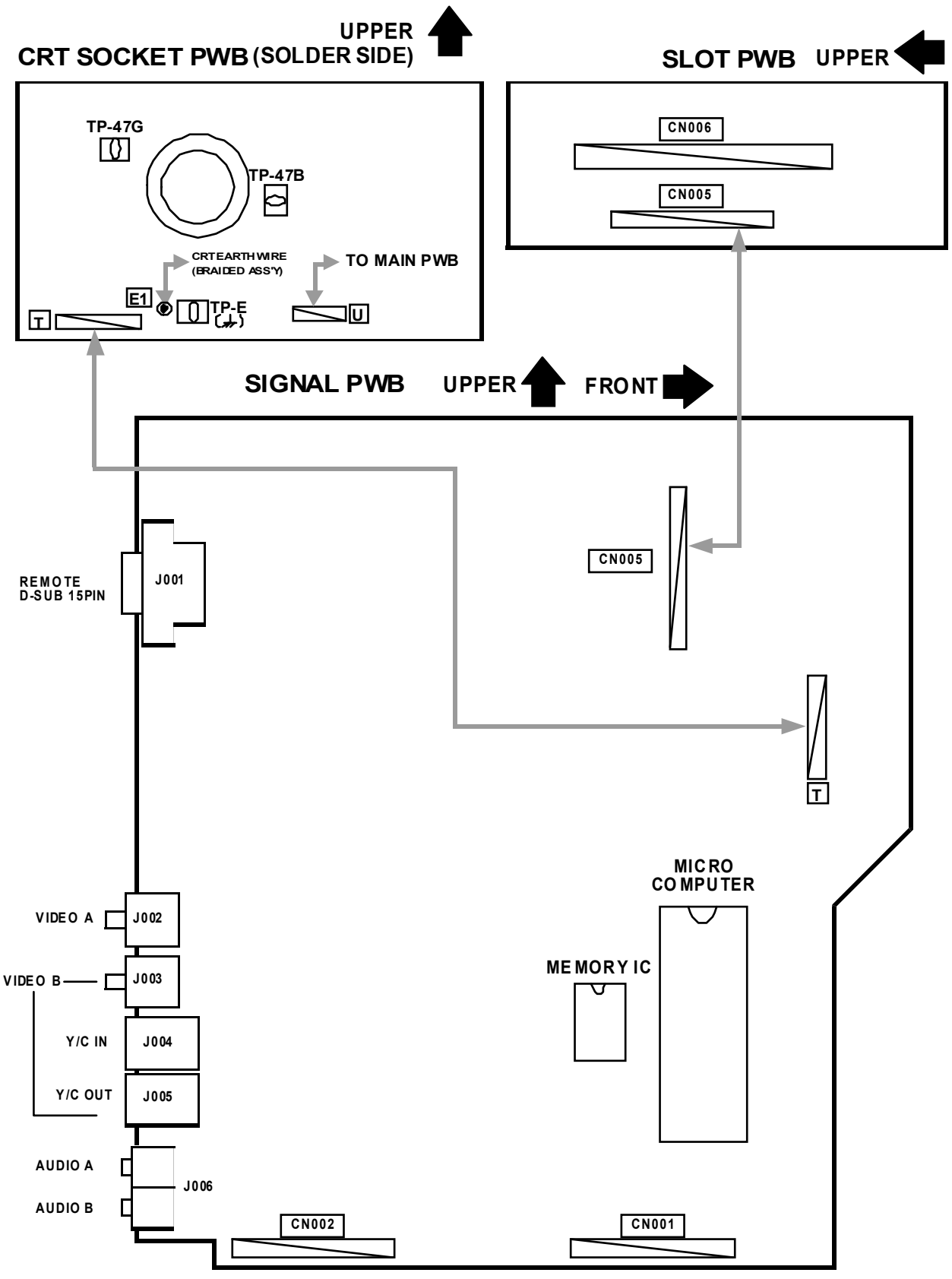
UPPER
CRT SOCKET PWB (SOLDER SIDE)
SLOT PWB UPPER
TP-47G
TP-47B
CRT EARTH WIRE (BRAIDED ASS'Y)
TO MAIN PWB
E1
TP-E
T
U
CN006
CN005
SIGNAL PWB UPPER FRONT
REMOTE D-SUB 15PIN
J001
CN005
T
MICRO COMPUTER
MEMORY IC
VIDEO A
J002
VIDEO B
J003
Y/C IN
J004
Y/C OUT
J005
AUDIO A
AUDIO B
J006
CN002
CN001

BASIC OPERATION OF SERVICE MENU

1. SERVICE MENU ITEMS

With the SERVICE MENU, various settings can be made, and they are broadly classified in the following items of adjustments. It is no requirement for adjustment the portion of each block.

SIGNAL BLOCK ····· This block adjusts the data of the various signal circuit controls.

WHITE BALANCE BLOCK··· This block adjusts the data of the WHITE BALANCE adjustment.

DEFLECTION BLOCK····· This block adjusts the data of the DEFLECTION circuit.

CONTROL BLOCK ····· This block adjusts the whole of the systems

2. BASIC OPERATION OF THE SERVICE MENU

(1) HOW TO ENTER THE SERVICE MENU

① Press **MENU** key and **VOLUME/SELECT + (UP)** key simultaneously (Fig. 1). The letter "S" appears at the upper left of the screen (Fig. 2).

② While displaying the letter "S", press **MENU** key and **CHROMA/PHASE** key simultaneously (Fig.1).
The screen display "PLEASE DON'T TOUCH" (Fig. 3).

③ WHILE displaying the letters above-mentioned, press **VOLUME/SELECT + (UP) key** or **– (DOWN) key** to display the SERVICE MENU as shown in Fig. 4.
If above-mentioned steps or state continues for more than 5 seconds without a further operation, the display extinguishes and the mode is released.

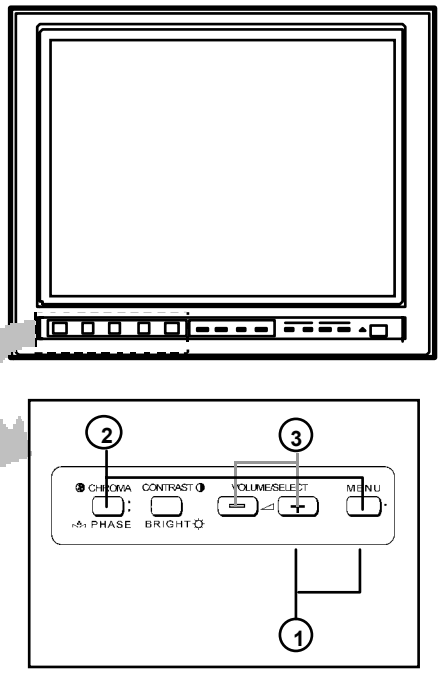

Fig.1

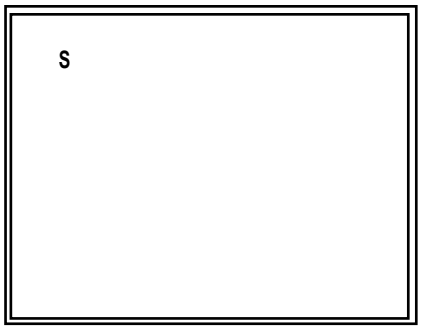

Fig. 2

Fig. 3

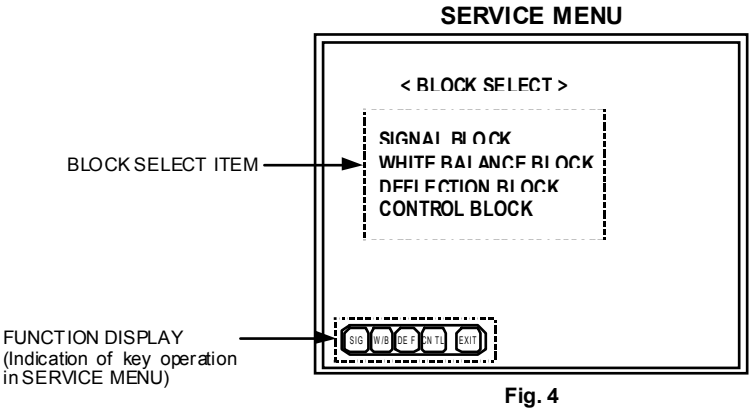

Fig. 4

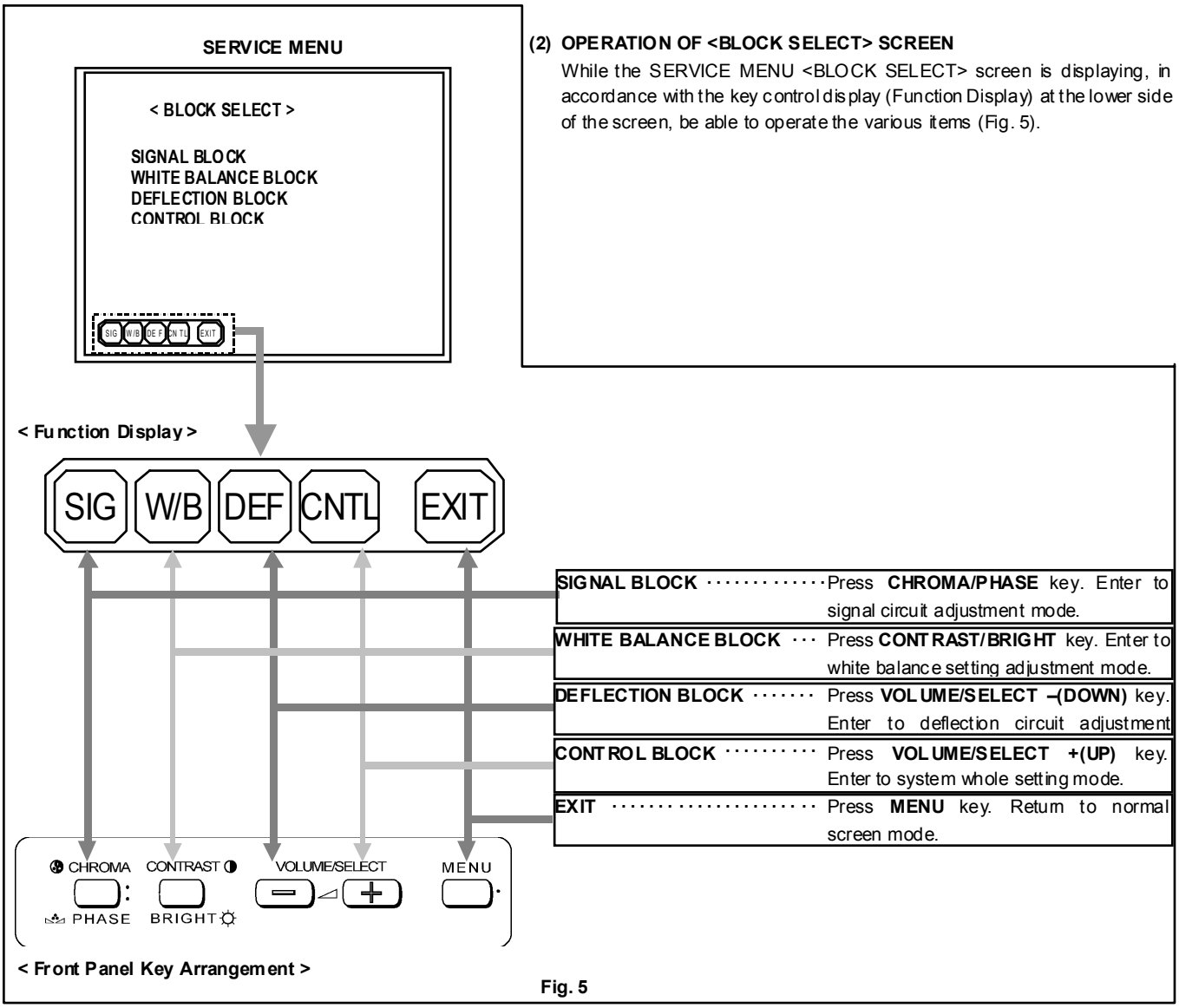

Fig. 5

(2) OPERATION OF <BLOCK SELECT> SCREEN

While the SERVICE MENU <BLOCK SELECT> screen is displaying, in accordance with the key control display (Function Display) at the lower side of the screen, be able to operate the various items (Fig. 5).

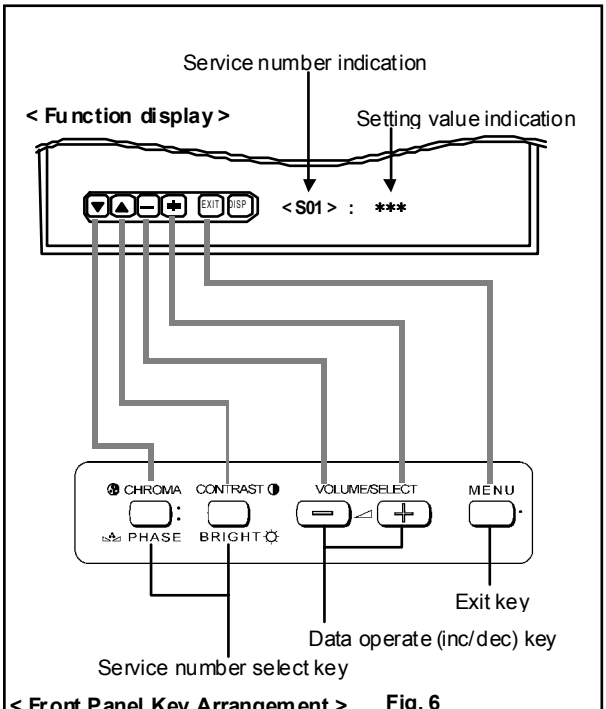

Fig. 6

< For example as following, explaining about SIGNAL BLOCK key operations. >

(3) SELECT THE SERVICE NUMBER

Press the **CHROMA/PHASE** or **CONTRAST/BRIGHT** key to select the service number.

(4) ADJUSTMENT DATA OPERATION

Press the **VOLUME/SELECT + (UP)** key to change the setting value in the + direction.

Press the **VOLUME/SELECT – (DOWN)** key to change the setting value in the - direction.

(5) EXIT SERVICE MENU

When adjustments are completed, press **MENU** key then return to the BLOCK SELECT screen. Again press **MENU** key then return to the normal screen. The setting values are automatically memorized.

3. HOW TO OPERATE EACH SERVICE MENU ITEMS

■ SIGNAL BLOCK

① In the <BLOCK SELECT> screen, press the **CHROMA/PHASE** key.
② Then SIGNAL BLOCK adjustment mode screen is displayed (Fig. 7).
③ The original front key function replaced with the different function displayed at the lower side of the screen as shown below.
Refer to the illustration given below, the function about each key in this mode.
④ In this mode, **UNDER SCAN** key is the switch of the screen display. If necessary, you can shut off the display. Carefully, values of adjustment items are changed while shut off the screen display.
⑤ Press the **MENU** key, then exit the SIGNAL BLOCK screen to return to the <BLOCK SELECT> screen.

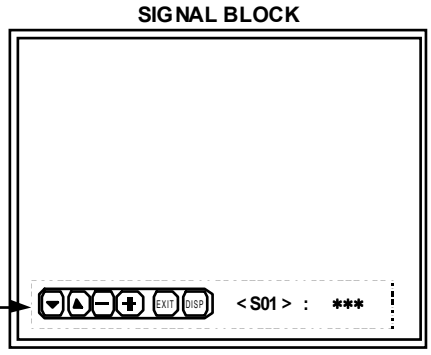

Fig. 7

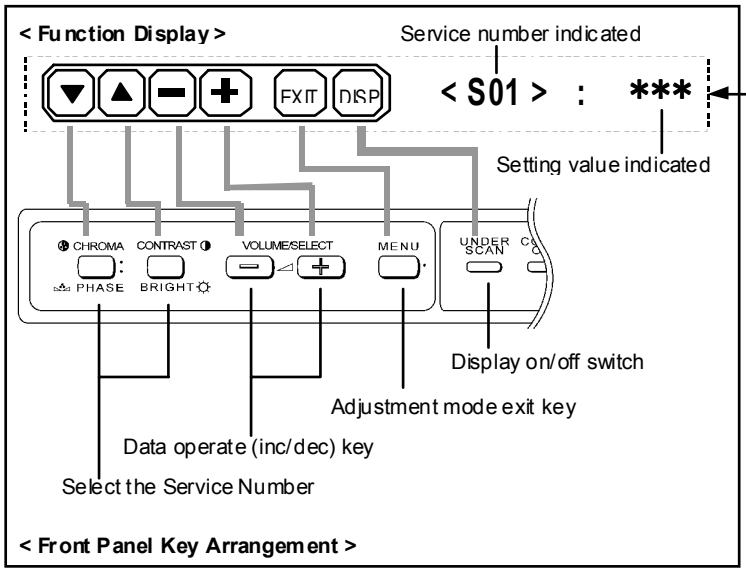

■ WHITE BALANCE BLOCK

①In the <BLOCK SELECT> screen, press the **CONTRAST/BRIGHT** key.
②Then WHITE BALANCE menu screen is displayed (Fig. 8).
③In this case, key function is replaced as shown below. There are several modes of WHITE BALANCE adjustment. Select the various WHITE BALANCE mode from this menu screen.
④Press the **MENU** key few times, then exit from the WHITE BALANCE BLOCK screen to return to the <BLOCK SELECT> screen.

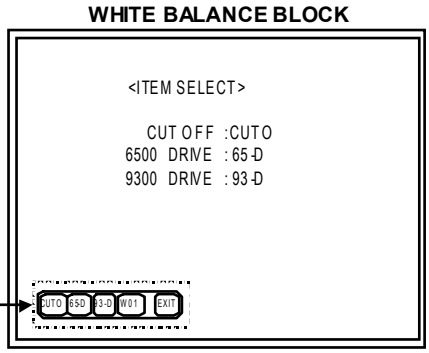

Fig.8

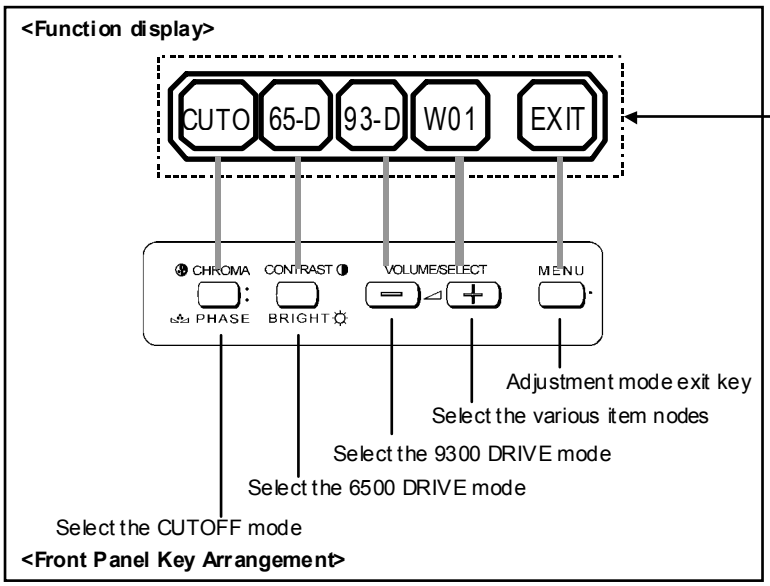

[WHITE BALANCE Adjustment : METHOD 1]

Accordance with the screen display, select the each WHITE BALANCE mode following below.

CUTOFF adjustment mode (Low light adjustment)

①In the WHITE BALANCE menu screen, press the **CHROMA/PHASE** key to enter to the CUTOFF adjustment mode (Fig. 9). In this case, key function is replaced as shown below.

②Whenever press the **CHROMA/PHASE** key, change the adjustment colour of R, G and B.

③The single horizontal line service screen appears if press the **CONTRAST/BRIGHT** key (Fig. 10).

Refer to the "Low-Light adjustment" corresponding page about detailed adjustment steps.

CUTOFF ADJUSTMENT SCREEN

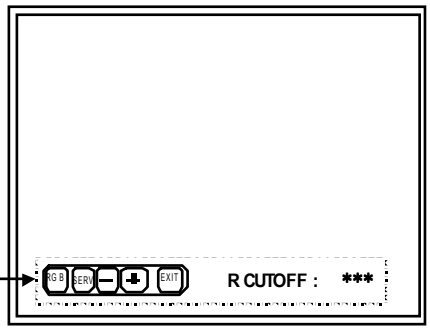

Fig.9

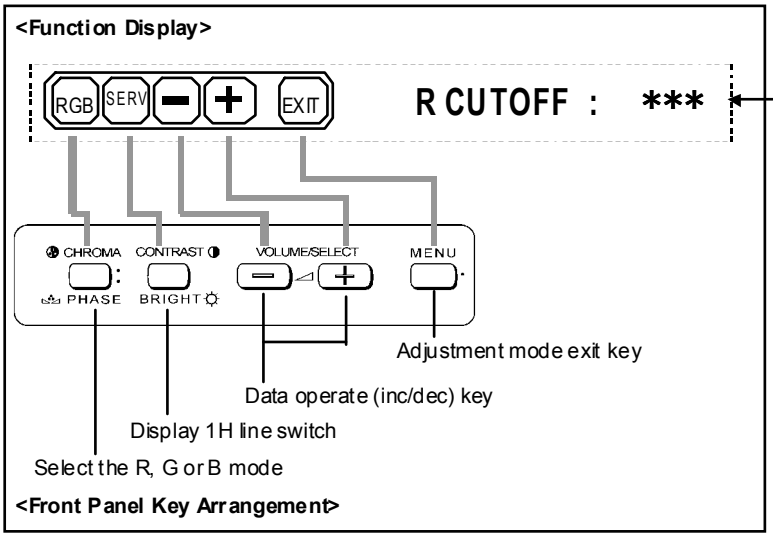

SINGLE HORIZONTAL LINE

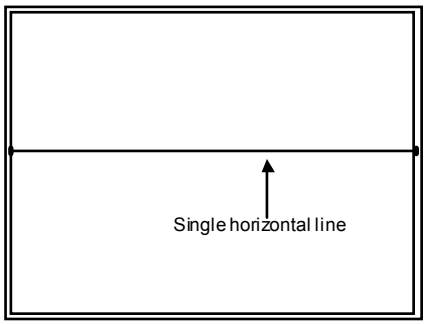

Fig.10

DRIVE adjustment mode (HIGH LIGHT)

①In the WHITE BALANCE menu screen, press the **CONTRAST/BRIGHT** key to enter to the 6500 DRIVE adjustment mode (Fig. 11). In this case, press the **VOLUME/SELECT (-)** key, enter to 9300 DRIVE mode.

②Whenever press the **CHROMA/PHASE** key, change the "R DRIVE" or "B DRIVE" adjustment mode.

③**CONTRAST/ BRIGHT** key is the switch of the screen display. If necessary, you can shut off the display. Carefully, values of adjustment items are changed while shut off the screen display.

Refer to the "High-Light adjustment" corresponding page about detailed adjustment steps.

DRIVE 6500 ADJUSTMENT MODE

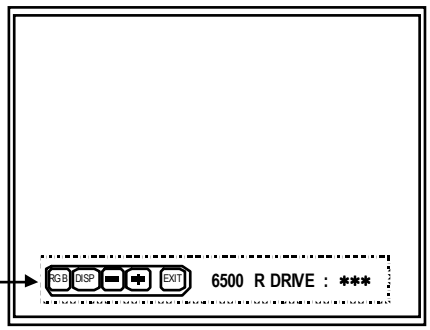

Fig.11

DRIVE 9300 ADJUSTMENT MODE

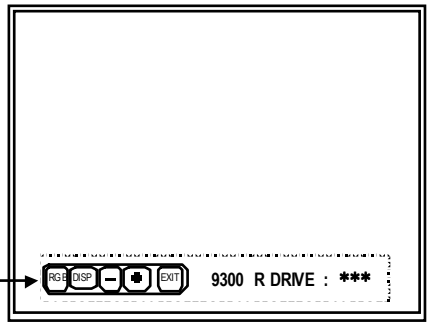

Fig.12

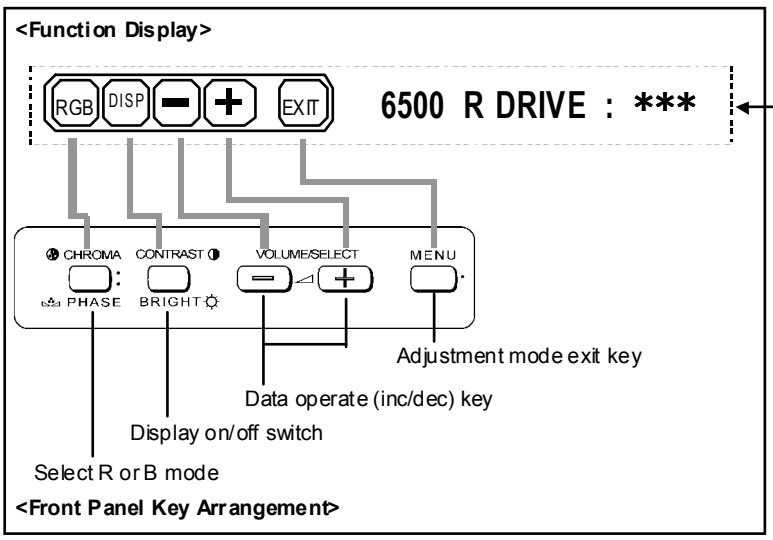

[WHITE BALANCE Adjustment : METHOD 2]

SERVICE MENU has the other method for adjusting the WHITE BALANCE.

① In the WHITE BALANCE menu screen, press the **VOLUME/SELECT +(UP)** key, then enter to the "W01" adjustment mode (Fig. 13).

② Whenever press the **CHROMA/PHASE** key, change the adjustment mode from W01 to W24. And change the adjustment value by pressing the **VOLUME/SELECT (– or +)** keys.

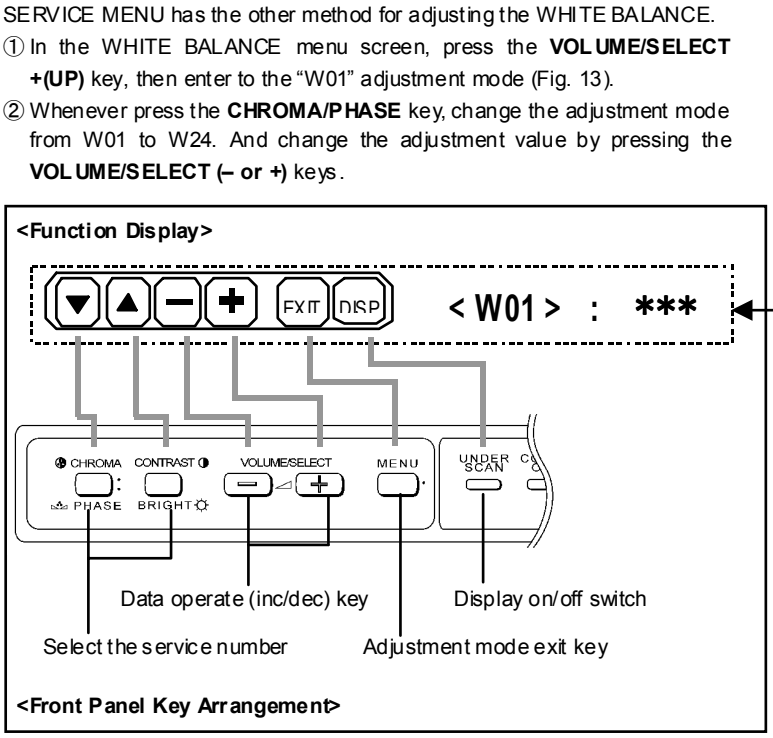

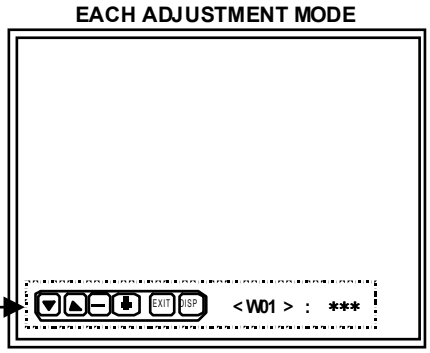

Fig.13

■DEFLECTION BLOCK

① In the <BLOCK SELECT> screen, press the **VOLUME/SELECT – (DOWN)** key.

② Then the DEFLECTION BLOCK adjustment screen is displayed (Fig. 14). The indication service number on the screen are changed by the vertical frequency, aspect ratio and scan size of signal for adjustment.

③ The original front key function replaced with the other function displayed at the lower side of the screen as shown below.

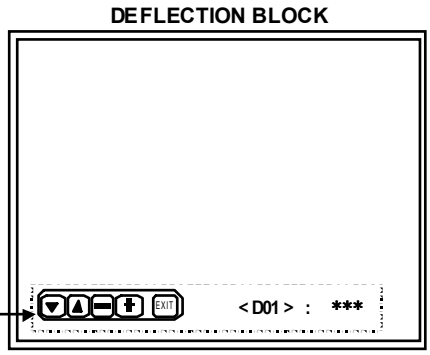

Fig.14

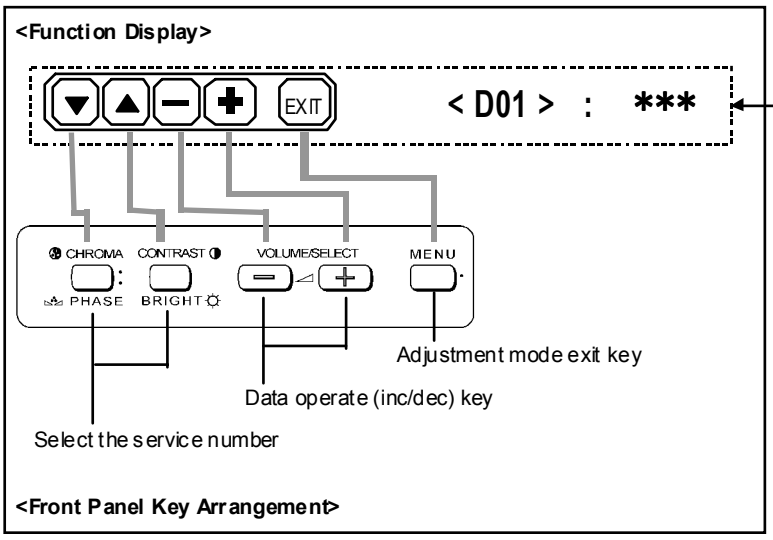

■ CONTROL BLOCK

In the CONTROL BLOCK, there are several setting items for decide the whole system condition. It is no requirement for adjustment except for the portion about this block. Please not to change the values. If you had changed the values, you should put back the values by the method as following.

① In the <BLOCK SELECT> screen, press the **VOLUME/SELECT +(UP)** key.

② Then the CONTROL BLOCK adjustment screen is displayed (Fig. 15).

③ The original front key function replaced with the other function displayed at the lower side of the screen as shown below.

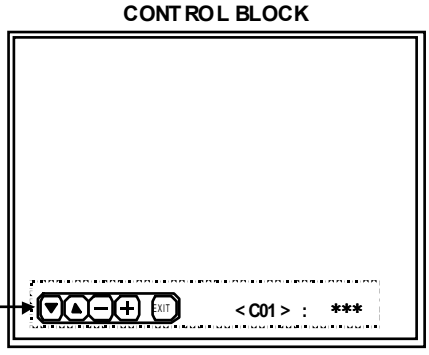

Fig.15

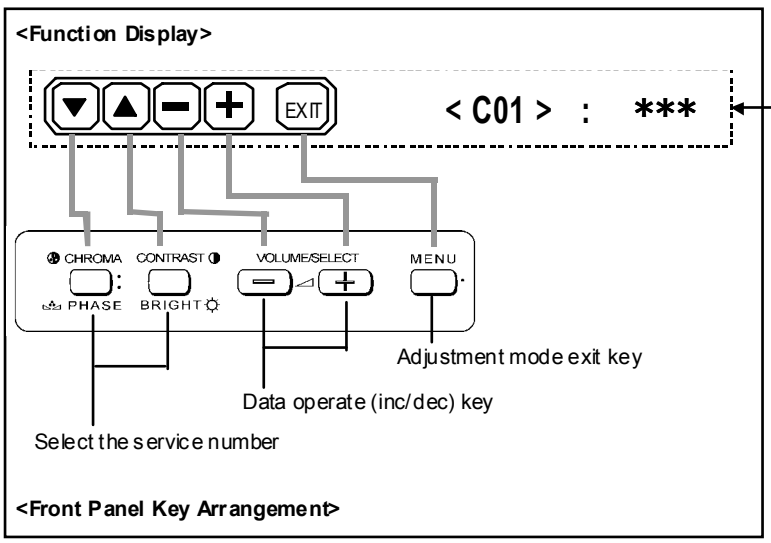

4. SERVICE MENU FLOW CHART

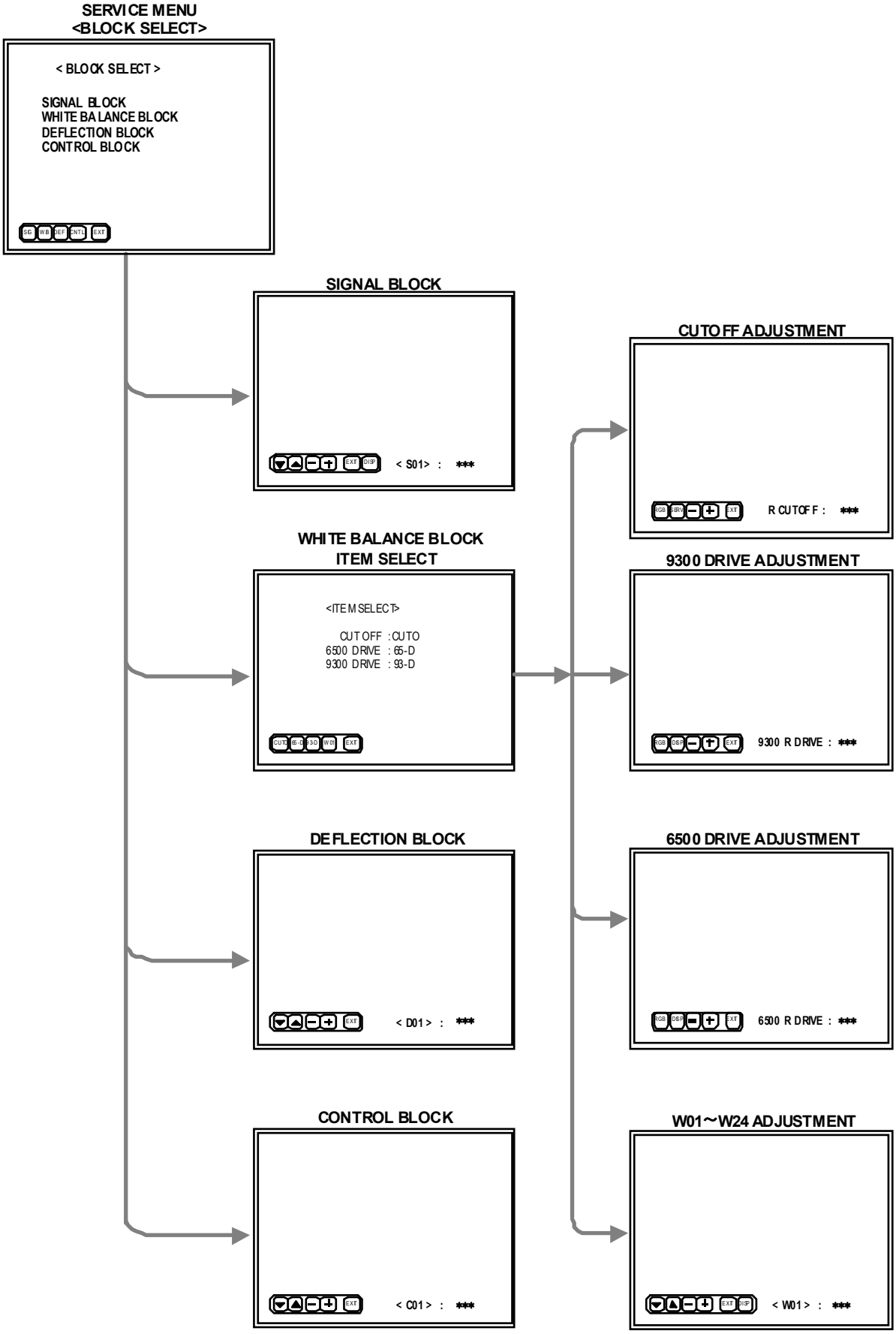

INITIAL SETTINGS OF THE SERVICE MENU

The values of the following tables are the initial value of Memory IC. They are not the values at the time of factory shipments. It is necessary to adjust the adjustment item of each block to an every best state of monitor based on this initial value. However, since the items of the marking gray colour are the fixed value, it is not necessary to adjust them. Please do not change the values.

SIGNAL BLOCK

Item	Input Signal	Contents	Variable Range	Attribute	Initial Value
S01	VIDEO	BRIGHT	000 ~ 255	ABSOLUTE	138
S02		CONTRAST	000 ~ 127	ABSOLUTE	081
S03		CHROMA(PAL)	000 ~ 127	ABSOLUTE	064
S04		CHROMA(NTSC)	000 ~ 127	ABSOLUTE	063
S05		PHASE(NTSC)	000 ~ 127	ABSOLUTE	061
S06	COMPONENT	CHROMA	000 ~ 127	ABSOLUTE	052
S07	RGB	BRIGHT	000 ~ 127	ABSOLUTE	070
S08		CONTRAST	-128 ~ 000 ~ +127	OFFSET	-006
S09	UNDERSCAN	BRIGHT	-128 ~ 000 ~ +127	OFFSET	000
S10		CONTRAST	-128 ~ 000 ~ +127	OFFSET	-009
S11	VIDEO	PHASE(PAL)	000 ~ 127	FIXED	062
S12	COMPONENT	PHASE	000 ~ 127	FIXED	063
S13	VIDEO	CONT TRACKING	00 ~ 31	FIXED	016

WHITE BALANCE BLOCK

Item	Input Signal	Contents	Variable Range	Attribute	Initial Value
W01	VIDEO	R CUTOFF	000 ~ 255	ABSOLUTE	050
W02		G CUTOFF	000 ~ 255	ABSOLUTE	050
W03		B CUTOFF	000 ~ 255	ABSOLUTE	050
W04		R DRIVE (6500)	000 ~ 127	ABSOLUTE	080
W05		B DRIVE (6500)	000 ~ 127	ABSOLUTE	048
W06		R DRIVE (9300)	000 ~ 127	ABSOLUTE	065
W07		B DRIVE (9300)	000 ~ 127	ABSOLUTE	055
W08	COMPONENT (REAR SLOT INPUT)	R CUTOFF	-128 ~ 000 ~ +127	OFFSET	000
W09		G CUTOFF	-128 ~ 000 ~ +127	OFFSET	000
W10		B CUTOFF	-128 ~ 000 ~ +127	OFFSET	000
W11		R DRIVE (6500)	-128 ~ 000 ~ +127	OFFSET	000
W12		B DRIVE (9300)	-128 ~ 000 ~ +127	OFFSET	000
W13		R DRIVE (6500)	-128 ~ 000 ~ +127	OFFSET	000
W14		B DRIVE (9300)	-128 ~ 000 ~ +127	OFFSET	000
W15	RGB (REAR SLOT INPUT)	R CUTOFF	-128 ~ 000 ~ +127	OFFSET	000
W16		G CUTOFF	-128 ~ 000 ~ +127	OFFSET	000
W17		B CUTOFF	-128 ~ 000 ~ +127	OFFSET	000
W18		R DRIVE (6500)	-128 ~ 000 ~ +127	OFFSET	000
W19		B DRIVE (9300)	-128 ~ 000 ~ +127	OFFSET	000
W20		R DRIVE (6500)	-128 ~ 000 ~ +127	OFFSET	000
W21		B DRIVE (9300)	-128 ~ 000 ~ +127	OFFSET	000
W22	UNDERSCAN	R CUTOFF	-128 ~ 000 ~ +127	OFFSET	000
W23		G CUTOFF	-128 ~ 000 ~ +127	OFFSET	000
W24		B CUTOFF	-128 ~ 000 ~ +127	OFFSET	000

DEFLECTION BLOCK

Item	Scan size Aspect Ratio	Vertical Frequency	Contents	Variable Range	Attribute	Initial Value
D01	4:3 NORMAL	50Hz	HORIZONTAL POSITION	000 ~ 031	ABSOLUTE	013
D02			HORIZONTAL SIZE	000 ~ 063	ABSOLUTE	046
D03			VERTICAL POSITION	000 ~ 127	ABSOLUTE	037
D04			VERTICAL SIZE	000 ~ 127	ABSOLUTE	068
D05			VERTICAL LINEARITY	000 ~ 031	ABSOLUTE	023
D06			VERTICAL S-CORRECTION	000 ~ 063	ABSOLUTE	042
D07			E-W PARABOLA	000 ~ 063	ABSOLUTE	043
D08			E-W CORNER	000 ~ 031	ABSOLUTE	019
DA1	4:3 NORMAL	60Hz	HORIZONTAL POSITION	-032 ~ 000 ~ +031	OFFSET	+003
DA2			HORIZONTAL SIZE	-064 ~ 000 ~ +063	OFFSET	-005
DA3			VERTICAL POSITION	-128 ~ 000 ~ +127	OFFSET	+002
DA4			VERTICAL SIZE	-128 ~ 000 ~ +127	OFFSET	-002
DA5			VERTICAL LINEARITY	-032 ~ 000 ~ +031	OFFSET	-002
DA6			VERTICAL S-CORRECTION	-064 ~ 000 ~ +063	OFFSET	000
DA7			E-W PARABOLA	-064 ~ 000 ~ +063	OFFSET	000
DA8			E-W CORNER	-032 ~ 000 ~ +031	OFFSET	000
DB1	16:9 NORMAL	50Hz	HORIZONTAL POSITION	-032 ~ 000 ~ +031	OFFSET	000
DB2			HORIZONTAL SIZE	-064 ~ 000 ~ +063	OFFSET	000
DB3			VERTICAL POSITION	-128 ~ 000 ~ +127	OFFSET	000
DB4			VERTICAL SIZE	-128 ~ 000 ~ +127	OFFSET	-031
DB5			VERTICAL LINEARITY	-032 ~ 000 ~ +031	OFFSET	000
DB6			VERTICAL S-CORRECTION	-064 ~ 000 ~ +063	OFFSET	000
DB7			E-W PARABOLA	-064 ~ 000 ~ +063	OFFSET	-021
DB8			E-W CORNER	-032 ~ 000 ~ +031	OFFSET	-002
DC1	16:9 NORMAL	60Hz	HORIZONTAL POSITION	-032 ~ 000 ~ +031	OFFSET	000
DC2			HORIZONTAL SIZE	-064 ~ 000 ~ +063	OFFSET	000
DC3			VERTICAL POSITION	-128 ~ 000 ~ +127	OFFSET	000
DC4			VERTICAL SIZE	-128 ~ 000 ~ +127	OFFSET	-030
DC5			VERTICAL LINEARITY	-032 ~ 000 ~ +031	OFFSET	000
DC6			VERTICAL S-CORRECTION	-064 ~ 000 ~ +063	OFFSET	000
DC7			E-W PARABOLA	-064 ~ 000 ~ +063	OFFSET	-021
DC8			E-W CORNER	-032 ~ 000 ~ +031	OFFSET	-002
DD1	4:3 UNDER SCAN	50Hz	HORIZONTAL POSITION	-032 ~ 000 ~ +031	OFFSET	000
DD2			HORIZONTAL SIZE	-064 ~ 000 ~ +063	OFFSET	-004
DD3			VERTICAL POSITION	-128 ~ 000 ~ +127	OFFSET	000
DD4			VERTICAL SIZE	-128 ~ 000 ~ +127	OFFSET	000
DD5			VERTICAL LINEARITY	-032 ~ 000 ~ +031	OFFSET	000
DD6			VERTICAL S-CORRECTION	-064 ~ 000 ~ +063	OFFSET	000
DD7			E-W PARABOLA	-064 ~ 000 ~ +063	OFFSET	-028
DD8			E-W CORNER	-032 ~ 000 ~ +031	OFFSET	000
DE1	4:3 UNDER SCAN	60Hz	HORIZONTAL POSITION	-032 ~ 000 ~ +031	OFFSET	000
DE2			HORIZONTAL SIZE	-064 ~ 000 ~ +063	OFFSET	-002
DE3			VERTICAL POSITION	-128 ~ 000 ~ +127	OFFSET	000
DE4			VERTICAL SIZE	-128 ~ 000 ~ +127	OFFSET	002
DE5			VERTICAL LINEARITY	-032 ~ 000 ~ +031	OFFSET	000
DE6			VERTICAL S-CORRECTION	-064 ~ 000 ~ +063	OFFSET	000
DE7			E-W PARABOLA	-064 ~ 000 ~ +063	OFFSET	-028
DE8			E-W CORNER	-032 ~ 000 ~ +031	OFFSET	000
DF7	16:9 UNDER SCAN	50Hz	E-W PARABOLA	-064 ~ 000 ~ +063	OFFSET	014
DF8			E-W CORNER	-032 ~ 000 ~ +031	OFFSET	000
DG7	16:9 UNDER SCAN	60Hz	E-W PARABOLA	-064 ~ 000 ~ +063	OFFSET	014
DG8			E-W CORNER	-032 ~ 000 ~ +031	OFFSET	000

CONTROL BLOCK

Item	Contents		Variable Range	Attribute	Initial Value
C01	DESTINATION 0 : FOR JAPN (9300) 1 : FOR EUROPE / US (6500)		000 ~ 001	FIXED	000 (Be sure to set as 001)
C02	BRIGHT POINT	UPPER	000 ~ 255	FIXED	016
C03		LOWER	000 ~ 255	FIXED	026
C04	CONTRAST POINT	UPPER	000 ~ 127	FIXED	016
C05		LOWER	000 ~ 127	FIXED	026
C06	CHROMA POINT	UPPER	000 ~ 127	FIXED	040
C07		LOWER	000 ~ 127	FIXED	040
C08	PHASE POINT	UPPER	000 ~ 127	FIXED	040
C09		LOWER	000 ~ 127	FIXED	040
C10	OSD HORIZONTAL POSITION		000 ~ 010	FIXED	000
C11	OSD VERTICAL FREQUENCY 50Hz		000 ~ 010	FIXED	004
C12	OSD VERTICAL FREQUENCY 60Hz		000 ~ 010	FIXED	002
C13	HORIZONTAL CENTER (RGB)		-128 ~ 000 ~ +127	OFFSET	007
C14	HORIZONTAL CENTER (COMPONENT)		-128 ~ 000 ~ +127	OFFSET	002
C15	BRIGHT SERVICE		000 ~ 127	FIXED	000
C16	SHARPNESS CENTER		000 ~ 127	FIXED	024
C17	HVT H		000 ~ 007	FIXED	004
C18	HVT V		000 ~ 007	FIXED	003
C19	HVT H (UNDER SCAN)		000 ~ 007	FIXED	004
C20	HVT V (UNDER SCAN)		000 ~ 007	FIXED	003
C21	V-SS.CR		000 ~ 015	FIXED	005
C22	TRAPEZOID		000 ~ 127	FIXED	063
C23	HOUR METER		001 ~ 650	MEASURED	001
C24	RUSH DELAY		000 ~ 255	FIXED	032
C25	DEGAUSS DELAY TIME		000 ~ 255	FIXED	005
C26 ~C33	SLOT IDENTIFY		000 ~ 255	FIXED	000
C27	SLOT IDENTIFY		000 ~ 255	FIXED	006

ADJUSTMENT

Item	Test equipment	Test points	Adjustment locations	Adjustment procedure
Checking of the B1 power supply	**DC Voltmeter**	**TP-91(B1) : (S1 ① pin)** **TP-E(GND) : (S1 ⑤ pin) [MAIN PWB]**	**B1 ADJUST VR [MAIN PWB]** **SCREEN VR [Lower knob : in FBT]**	1. Set the power supply voltage to **AC230V± 5V** (TM-H1950CG/E) **AC120V± 5V** (TM-H1950CG/U). 2. Select WHITE BALANCE BLOCK mode from <BLOCK SELECT> screen. 3. Select CUTOFF adjustment mode (Low light mode). 4. Press "SERV" switch to display the horizontal line. 5. Adjust the SCREEN VR to disappear the horizontal line. 6. Check the B1 voltage as **53V± 0.2V**. 7. Readjust the SCREEN VR to appear the horizontal line faintly, and cancel the horizontal line to press the "SERV" switch.
Checking of the High voltage	**High voltage meter**	**CRT Anode**	**SCREEN VR [Lower knob : in FBT]**	1. Set the power supply voltage to **AC230V± 5V** (TM-H1950CG/E) **AC120V± 5V** (TM-H1950CG/U). 2. Select WHITE BALANCE BLOCK mode from <BLOCK SELECT> screen. 3. Select CUTOFF adjustment mode (Low light mode). 4. Press "SERV" switch to display the horizontal line. 5. Adjust the SCREEN VR to disappear the horizontal line. 1. Connect the high voltage meter to the CRT anode and check it as **24.7～27.3kV**. 7. Readjust the SCREEN VR to appear the horizontal line faintly, and cancel the horizontal line to press the "SERV" switch.
Focus adjustment	**Signal generator (Resolution pattern)**		**FOCUS VR1 FOCUS VR2 [Upper and Middle knob : in FBT]**	1. Input the resolution pattern signal. 2. Adjust the Focus VR1 and VR2 for optimum focus where moire is not apparent. 3. Darken the picture and adjust the focus by turning counter-clockwise from the position where focus is poor. 4. Alternately repeat the above steps to obtain the optimum position.

- **Must be input the composite video signal for adjusting the white balance.**
- **Set the aspect ratio to 4:3.**
- **There are no requirement for adjustment in the under scan mode and RGB / component signal mode.**

Item	Test equipment	Test points	Adjustment locations	Adjustment procedure
White Balance (Low light) adjustment	**Signal generator (Monoscope pattern)**		**SCREEN VR [Lower knob : in FBT]** **W01 R CUTOFF** **W02 G CUTOFF** **W03 B CUTOFF** **[SERVICE MENU]**	Finish the adjustment of B1 voltage completely first in advance of this adjustment. 1. Input the mono-scope pattern signal. 2. Select the WHITE BALANCE BLOCK mode from <BLOCK SELECT> screen. 3. Confirm the initial setting value of W01, W02, W03 in the SERVICE MENU are 50. 4. Select the CUTOFF adjustment mode. 5. Press "SERV" switch to display the single horizontal line. Carefully adjust the SCREEN VR to horizontal line appears faintly, not to shine much. 6. Gradually turn the SCREEN VR from the left to the right direction to bring one of the red, green and blue colours faintly visible. 7. Then select the CUTOFF switch (R, G or B) that colour except for appears first, and adjusting 2 colours CUTOFF values by pressing the +key, and make horizontal line visible white. 8. Readjust the SCREEN VR to appear the horizontal line faintly, and cancel the horizontal line to press the "SERV" switch.
White Balance (High light) 6500K adjustment	**Signal generator (Monoscope pattern)** **Colour temperature meter or Colour Analyser**		**W04 R DRIVE** **W05 B DRIVE** **[SERVICE MENU]**	Finish the adjustment of low light completely first in advance of this adjustment. 1. Input the mono-scope pattern signal. 2. Select the WHITE BALANCE BLOCK mode from <BLOCK SELECT> screen. 3. Select the 6500 DRIVE adjustment mode (High light 6500 mode). 4. Apply the sensor of the colour temperature meter to the CRT surface, portion of the 100% white, adjust the W04 (R DRIVE) or W05 (B DRIVE) to setting 6500K (x=0.313, y=0.329). 5. Exit the SERVICE MENU by pressing the "EXIT" key. 6. Check the white balance tracking is finest when CONTRAST and BRIGHT are up and down.

Item	Test equipment	Test points	Adjustment locations	Adjustment procedure
White Balance (High light) 9300K adjustment	**Signal generator (Monoscope pattern)** **Colour temperature meter or Colour Analyser**		**W06 R DRIVE** **W07 B DRIVE** **[SERVICE MENU]**	Finish the adjustment of low light completely first in advance of this adjustment. 1. Input the mono-scope pattern signal. 2. Select the WHITE BALANCE BLOCK mode from <BLOCK SELECT> screen. 3. Select the 9300 DRIVE adjustment mode (High light 9300 mode). 4. Apply the sensor of the colour temperature meter to the CRT surface, portion of the 100% white, adjust the W06 (R DRIVE) or W07 (B DRIVE) to setting 9300K (x=0.283, y=0.297). 5. Exit the SERVICE MENU by pressing the "EXIT" key. 6. Check the white balance tracking is finest when CONTRAST and BRIGHT are up and down.
Bright adjustment	**Signal generator (Sprit colour bar)**		**S01 (BRIGHT)** **[SERVICE MENU]**	Finish the adjustment of low light completely first in advance of this adjustment. 1. Input a sprit colour bar signal. 2. Select the SIGNAL BLOCK mode from <BLOCK SELECT> screen. 3. Select the S01 item. 4. Adjust the S01 to where the sprit colour bar 0% black component not to brightens. 5. Check it to on and off the screen display by turning the "DISP" switch.
Contrast adjustment	**Signal generator (Full colour bar)** **Oscillo-scope**	**TP-47G** **TP-E(⏚)** **[CRT SOCKET PWB]**	**S02 (CONTRAST)** **[SERVICE MENU]**	1. Input the full colour bar signal. (75 / 0 / 75 / 0 set-up level signal) 2. Connect the oscillo-scope probe to TP-47G and TP-E(⏚). 3. Select the SIGNAL BLOCK mode from <BLOCK SELECT> screen. 4. Select the S02 item. 5. Adjust the S02 to become the voltage different between 75% white and 0% black to **37V±2Vp-p** as shown in figure.

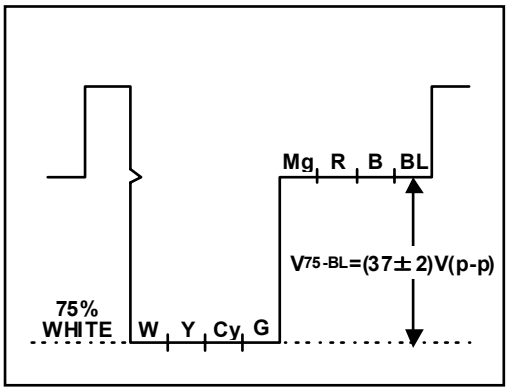

Item	Test equipment	Test points	Adjustment locations	Adjustment procedure
PAL CHROMA Saturation adjustment	**Signal generator (Full colour bar)** **Oscillo-scope**	**TP-47B** **TP-E(⏚)** **[CRT SOCKET PWB]**	**S03(PAL CHROMA)** **[SERVICE MENU]**	1. Input a PAL full colour bar signal. 2. Connect the oscillo-scope probe to TP-47B and TP-E(⏚). 3. Select the SIGNAL BLOCK mode from <BLOCK SELECT> screen. 4. Select the S03 item. 5. Adjust the S03 to become the voltage different between 75% white and blue to **0V±2Vp-p** as shown in figure.
PAL PHASE Saturation adjustment	**Signal generator (Full colour bar)**		**S11(PAL PHASE)** **[SERVICE MENU]**	1. Select the SIGNAL BLOCK mode from <BLOCK SELECT> screen. 2. Select the S11item. 3. Confirm that the value is 062. If differ, correctly set the value to 062.
NTSC 3.58 CHROMA Saturation adjustment	**Signal generator (Full colour bar)** **Oscillo-scope**	**TP-47B** **TP-E(⏚)** **[CRT SOCKET PWB]**	**S04** **(NTSC CHROMA)** **[SERVICE MENU]**	1. Input a NTSC 3.58 full colour bar signal. 2. Connect the oscillo-scope probe to TP-47B and TP-E(⏚). 3. Select the SIGNAL BLOCK mode from <BLOCK SELECT> screen. 4. Select the S04 item. 5. Adjust the S04 to become the voltage different between 75% white and blue to **0V±2Vp-p** as shown in figure.

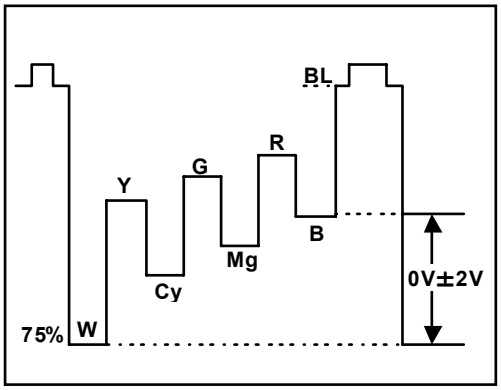

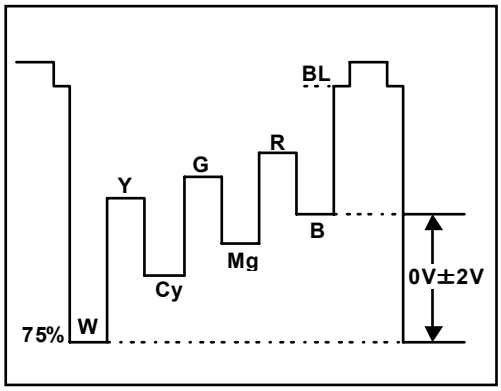

Item	Test equipment	Test points	Adjustment locations	Adjustment procedure
NTSC 3.58 PHASE adjustment	**Signal generator (Full colour bar)** **Oscillo-scope**	**TP-47B** **TP-E(⏚)** **[CRT SOCKET PWB]**	**S05 (NTSC PHASE) [SERVICE MENU]**	1. Input a NTSC 3.58 full colour bar signal. 2. Connect the oscillo-scope probe to TP-47B and TP-E(⏚). 3. Select the SIGNAL BLOCK from SERVICE MENU. 4. Select the S05 item. 5. Adjust the S05 to become the voltage different between 75% white and magenta to 0V±2Vp-p as shown in figure.
Component signal CHROMA adjustment	**Component / RGB input card (IF-C01COM)** **Signal generator (Full colour bar)** **Oscillo-scope**	**TP-47B** **TP-E(⏚)** **[CRT SOCKET PWB]**	**S06 (NTSC PHASE) [SERVICE MENU]**	1. Turn off the main power switch on the rear panel. 2. Insert the component / RGB input card to the rear slot. 3. Input the colour bar signals (Y, B-Y, R-Y) to each terminal of the component / RGB input card. 4. Select the "INPUT D" by the front panel switch. 5. Connect the oscillo-scope probe to TP-47B and TP-E(⏚). 6. Select the SIGNAL BLOCK from SERVICE MENU. 7. Select the S06 item. 8. Adjust the S06 to become the voltage different between 75% white and blue to **0V±2Vp-p** as shown in figure.

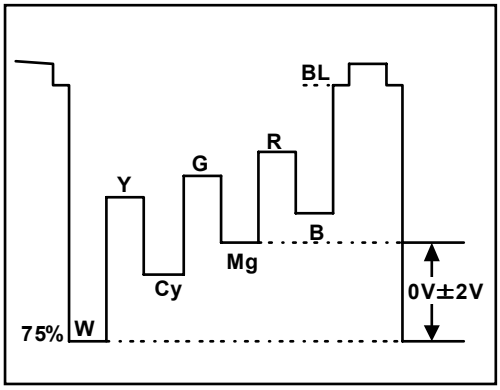

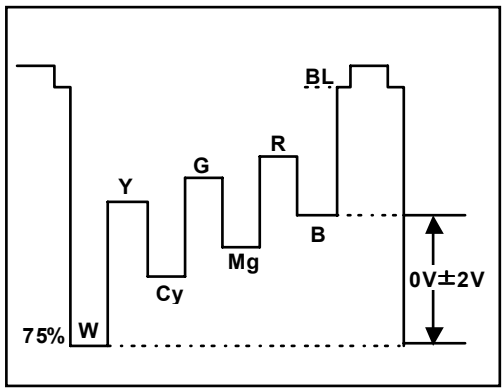

Item	Test equipment	Test points	Adjustment locations	Adjustment procedure
RGB signal BRIGHT adjustment	**Component / RGB input card (IF-C01COM)** **Signal generator (Sprit colour bar)** **Signal distributor**		**S07 (RGB BRIGHT) [SERVICE MENU]**	1. Turn off the main power switch on the rear panel. 2. Insert the component / RGB input card to the rear slot. 3. Input the 3 kind signals (G:B:R, Y:Pb:Pr, Y:B-Y:R-Y) to the each terminal of the component / RGB input card. 4. In case of using the composite synchronous signal, input the synchronous signal to the HD/CS terminal only. But in case of using the separate synchronous signal, input the horizontal synchronous signal to the HD/CS terminal and vertical synchronous signal to the VD terminal. 5. Select the "INPUT D" by the front panel switch. 6. Select the SIGNAL BLOCK from SERVICE MENU. 7. Select the S07 item. 8. Adjust the S07 to where the sprit colour bar 0% black component not to brightens. 9. Check it out by pressing the "DISP" switch on and off.
RGB signal CONTRAST adjustment	**Component / RGB input card (IF-C01COM)** **Signal generator (Sprit colour bar)** **Signal distributor** **Oscillo-scope**	**TP-47G** **TP-E(⏚)** **[CRT SOCKET PWB]**	**S08 (RGB CONTRAST) [SERVICE MENU]**	1. Turn off the main power switch on the rear panel. 2. Insert the component / RGB input card to the rear slot. 3. Input the 3 kind signals (G:B:R, Y:Pb:Pr, Y:B-Y:R-Y) to the each terminal of the component / RGB input card. 4. In case of using the composite synchronous signal, input the synchronous signal to the HD/CS terminal only. But in case of using the separate synchronous signal, input the horizontal synchronous signal to the HD/CS terminal and vertical synchronous signal to the VD terminal. 5. Select the "INPUT D" by the front panel switch. 6. Connect the oscillo-scope probe to TP-47G and TP-E(⏚). 7. Select the SIGNAL BLOCK from SERVICE MENU. 8. Select the S08 item. 9. Adjust the S08 to become the voltage different between 75% white and blue to **37V± 2Vp-p** as shown in figure.

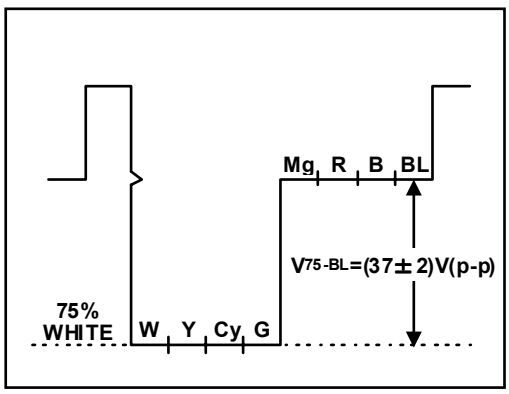

DEFLECTION CIRCUIT ADJUSTMENT

There are 2 kind of adjustment for the DEFLECTION circuit, PAL and NTSC. The adjustment using PAL signal is as the standard of all DEFLECTION adjustment. The "#" mark in the table given below expresses the number of each adjustment item. The screen aspect ratio 4 : 3 at 50Hz (PAL) is regarded as the reference value for all adjustments. The other values obtained in the adjustments using other signals become the offset values as opposed to the reference values.

Therefore, the adjustments must always be carried out in order of PAL and NTSC. When it does not adjust in this turn, and when operation which is different by the middle is carried out, it is necessary to readjust from the beginning.

MODE			DISPLAY
ASPECT RATIO	SCAN SIZE	VERTICAL FREQUENCY	
4:3	NORMAL SCAN	50Hz(PAL)	D0#
		60Hz(NTSC)	DA#
16:9	NORMAL SCAN	50Hz(PAL)	DB#
		60Hz(NTSC)	DC#
4:3	UNDER SCAN	50Hz(PAL)	DD#
		60Hz(NTSC)	DE#
16:9	UNDER SCAN	50Hz(PAL)	DF#
		60Hz(NTSC)	DG#

[Adjustment using the 50Hz signal input]

Item	Test equipment	Test points	Adjustment locations	Adjustment procedure
4:3 H. Center H. Size Adjustment	Signal generator (Crosshatch pattern)		D01 (H.CENTER) D02 (H. SIZE) [SERVICE MENU]	1. Input a crosshatch pattern signal. 2. Select DEFLECTION BLOCK mode from <BLOCK SELECT> screen. 3. Select D01 item. 4. Adjust D01 to align the picture center with the CRT center. 5. Adjust D02 to set horizontal size to **95%**. 6. Repeat above step 4 and 5 to adjust correctly.
4:3 Side pincushion Adjustment	Signal generator (Crosshatch pattern)		D07 (E-W PARABORA) D08 (E-W CORNER) [SERVICE MENU]	7. Confirm the side pincushion of the four corners in the screen. 8. If not optimum, adjust the D07 and D08 to become correctly.

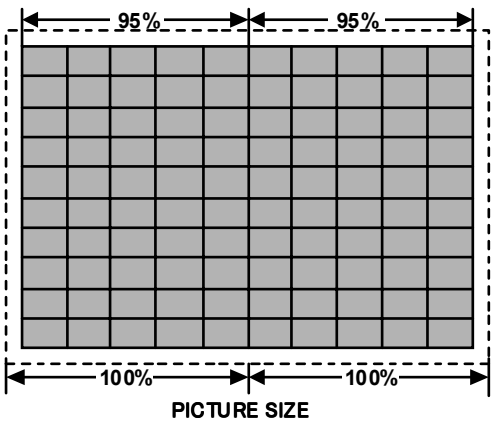

Item	Test equipment	Test points	Adjustment locations	Adjustment procedure
4:3 V. Center Adjustment	**Signal generator (Circle pattern)**		**D03 (V.CENTER) [SERVICE MENU]**	9. Input the PAL circle pattern signal. 10. Adjust D03 to agree with CRT center and signal center of vertical direction.
4:3 V. Lin Adjustment	**Signal generator (Circle pattern)**		**D04 (V. SIZE)** **D05 (V. LIN)** **D06 (V.S. COR) [SERVICE MENU]**	11. Input the PAL circle pattern signal. 12. Select the D04 to adjust the vertical size become 100%. 13. Select the D05 and reference to the below figure, adjust it to become correctly about vertical size and vertical linearity. 14. Select D06 and adjust it to the circle pattern becomes the true circle at top and bottom of the screen.

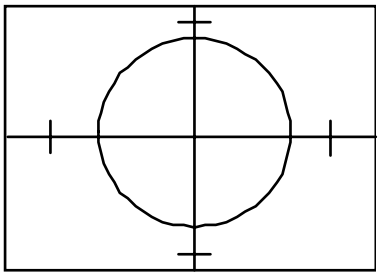

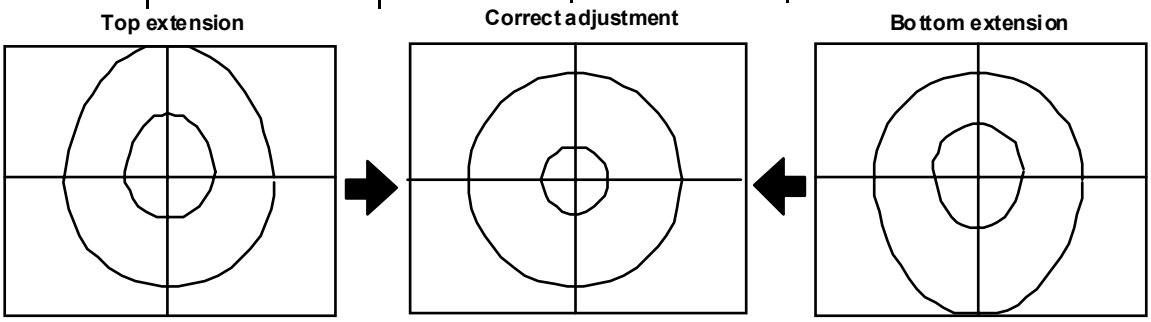

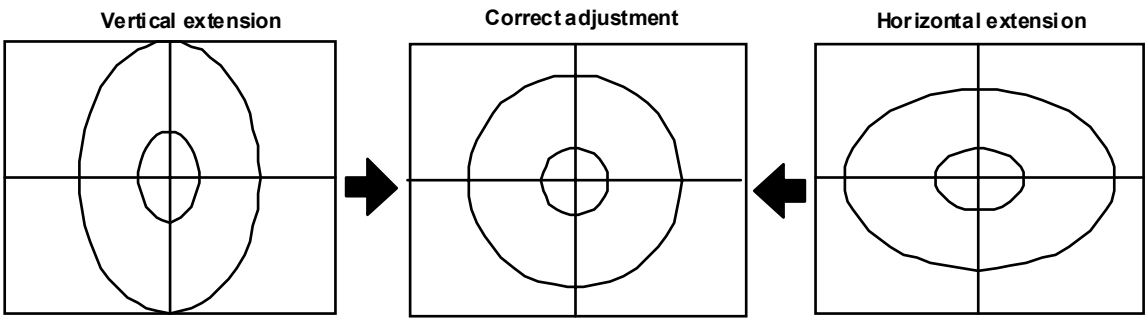

Item	Test equipment	Test points	Adjustment locations	Adjustment procedure
4:3 V. Size Adjustment	**Signal generator (Crosshatch pattern)**		**D04 (V.SIZE) [SERVICE MENU]**	15. Input the crosshatch signal. 16. Select D04 item, and adjust it to become the vertical scan size to **95%**. 17. If vertical center becomes out of adjustment, readjust D03 to correct.
16:9 V. Size Adjustment	**Signal generator (Circle pattern)**		**DB04 (V.SIZE) [SERVICE MENU]**	18. Input the PAL circle pattern signal. 19. Switch the aspect ratio to the 16:9 mode. 20. Adjust the DB04 to the vertical size become the value given below.
16:9 Side pincushion Adjustment	**Signal generator**		**DB07 (E-W PARABORA)** **DB08 (E-W CORNER)** **[SERVICE MENU]**	21. Confirm the side pincushion of the four corners in the screen. 22. If not optimum, adjust the DB07 and DB08 to become correctly.

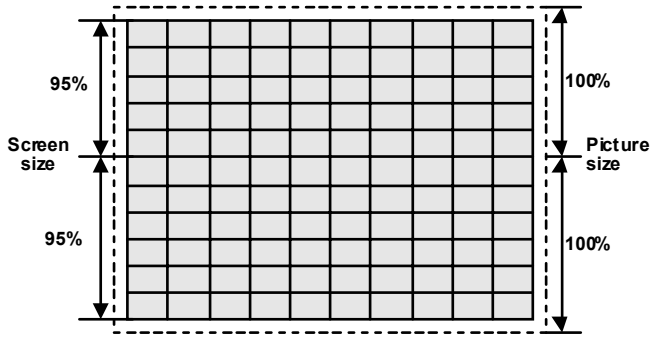

Vertical size	221±4mm

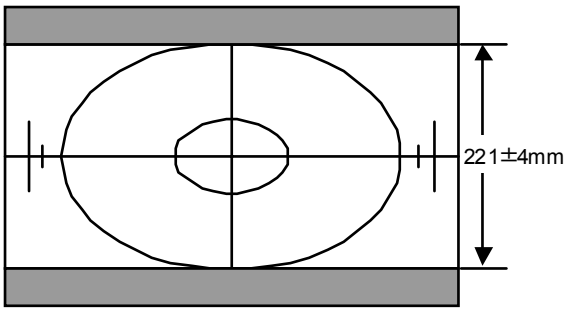

Item	Test equipment	Test points	Adjustment locations	Adjustment procedure
4:3 Under scan Horizontal center Adjustment	**Signal generator (Circle pattern)**		**DD01 (H. CENTER) [SERVICE MENU]**	23. Switch the aspect ratio to the 4:3 mode. 24. Input the PAL circle pattern signal. 25. Select the under scan mode. 26. Select the DD01 and adjust it to the left and right blanking width become equal.
4:3 Under scan Side pincushion Adjustment	**Signal generator (Crosshatch pattern)**		**DD07 (E-W PARABORA) DD08 (E-W CORNER) [SERVICE MENU]**	27. Confirm the side pincushion of the four corners in the screen. 28. If not optimum, adjust the DD07 and DD08 to become correctly.
4:3 Under scan Horizontal size Adjustment	**Signal generator (Crosshatch pattern)**		**DD02(H. SIZE) C22(TRAPEZOID) DD01(H. CENTER) [SERVICE MENU]**	29. Select the DD02 and adjust it to the left and right blanking widths become the value given below. 30. At this time, it checks that corner of the screen is not distorted. If distorted, adjust the C22 to become correct. 31. If horizontal center is shifted, readjust DD01.
16:9 Under scan Side pincushion Adjustment	**Signal generator (Crosshatch pattern)**		**DF07 (E-W PARABORA) DF08 (E-W CORNER) [SERVICE MENU]**	32. Switch the aspect ratio to the 16:9 mode. 33. Confirm the side pincushion of the four corners in the screen. 34. If not optimum, adjust the DF07 and DF08 to become correctly. 35. Turn the scan size to the normal.

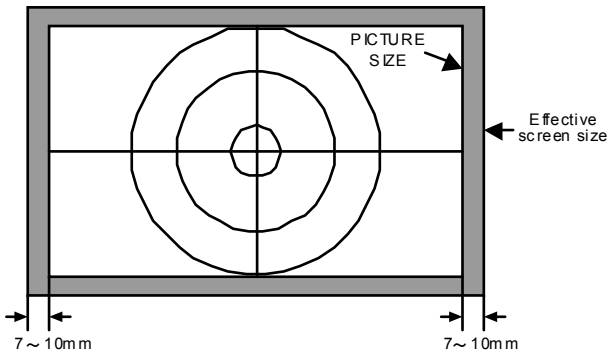

Horizontal Blanking Width (one side of screen)	7～10mm

[Adjustment using the 60Hz signal input]

Item	Test equipment	Test points	Adjustment locations	Adjustment procedure
4:3 Horizontal center **Horizontal size** **Side pincushion** **Adjustment**	**Signal generator**		**DA01 (H. CENTER)** **DA02 (H. SIZE)** **DA07 (E-W PARABOLA)** **DA08 (E-W CORNER)** **[SERVICE MENU]**	36. Switch the aspect ratio to the 4:3 mode. 37. Input the 60Hz NTSC crosshatch signal. 38. Adjust DA01 to align the picture center with the CRT center. 39. Adjust DA02 to set horizontal size to 95%. 40. Repeat above step 38 and 39 to adjust correctly. 41. Confirm the side pincushion of the four corners in the screen. If not optimum, adjust DA07 and DA08 to become correctly.
4:3 Vertical center **Vertical linearity** **Adjustment**	**Signal generator**		**DA03 (V. CENTER)** **DA04 (V. SIZE)** **DA05 (V. LIN)** **DA06 (V. S. COR)** **[SERVICE MENU]**	42. Input the circle pattern signal. 43. Adjust DA03 to agree with CRT center and signal center of vertical direction. 44. Adjust DA04 to set the vertical size is 100%. 45. Adjust DA05 to the vertical linearity become correctly. 46. Adjust DA06 to the circle pattern becomes true circle at the top and bottom of the screen. 47. Adjust the DA04 to set the vertical size is 95%.
16:9 Vertical center **Vertical linearity** **Adjustment**	**Signal generator**		**DC04 (V. SIZE)** **DC07 (E-W PARABOLA)** **DC08 (E-W CORNER)** **[SERVICE MENU]**	48. Set the aspect ratio to 16:9. 49. Adjust the vertical size by DC04. 50. Confirm the side pincushion of the four corners in the screen. If not optimum, adjust DC07 and DC08 to become correctly.
4:3 Under scan Horizontal center **Horizontal size** **Side pincushion Adjustment**	**Signal generator**		**DE01 (H. CENTER)** **DE02 (H. SIZE)** **DE07 (E-W PARABOLA)** **DE08 (E-W CORNER)** **[SERVICE MENU]**	51. Switch the aspect ratio to the 4:3 mode. 52. Set the screen to the under scan mode. 53. Adjust DE01 to align the picture center with the CRT center. 54. Adjust DE02 to set horizontal size to 95%. 55. Confirm the side pincushion of the four corners in the screen. If not optimum, adjust DE07 and DE08 to become correctly.
16:9 Under scan Side pincushion Adjustment	**Signal generator**		**DG07 (E-W PARABOLA)** **DG08 (E-W CORNER)** **[SERVICE MENU]**	56. Set the aspect ratio to 16:9. 57. Set the screen to the under scan mode. 58. Confirm the side pincushion of the four corners in the screen. If not optimum, adjust DG07 and DG08 to become correctly.

SELF DIAGNOSIS FUNCTION

1. OUTLINE

This model includes a SELF-DIAGNOSIS FUNCTION that checks the circuit operating status and in event of malfunction, displays and stores the data in a memory. The data are stored in an I^2C memory.
Fault detection starts with the I^2C bus and is performed according to the input states of the control lines connected to the MAIN CPU.

2. USAGE

SELF DIAGNOSIS FUNCTION mode entry

(1) While press the **MENU** key and **CONTRAST/BRIGHT** key simultaneously, and push the POWER switch on the front panel to turn on.

(2) Then displays the SELF-DIAGNOSIS FUNCTION screen. The screen indicates as shown in the table and the SELF-DIAGNOSIS FUNCTION mode is entered. If in event a malfunction at RASTER not display, at this time POWER LED flashes.

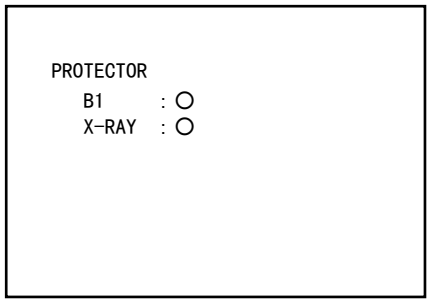

CAUSE	LED FLASHING CYCLE
X-RAY PROTECTOR	Quickly (0.1 sec on / 0.1 sec off cycles)
OVER CURRENT PROTECTOR	Slowly (1.0 sec on / 1.0 sec off cycles)

SELF DIAGNOSIS FUNCTION mode release

Turn the power switch to off or disconnect the power plug from AC outlet. In this way, not to clear the error counts.

Reset the error count

(1) While press the **MENU** key and **CHROMA/PHASE** key simultaneously, and push the MAIN POWER switch on.

(2) Then displays the screen as shown right. Press the "+" key. Then clear the error count of the each item.

SELF DIAGNOSIS RESET

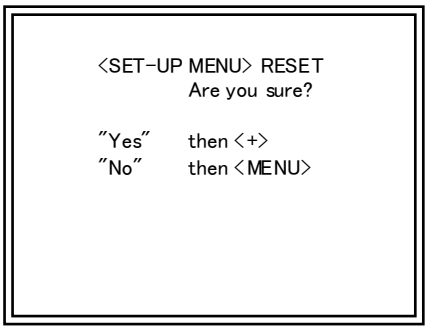

Fault history

The fault history counts up to a maximum of 9 times for each item. If the number of times exceeds 9, the display remains at 9. The fault history remains stored in the memory until deleted.

3. CONTENTS

DISPLAY	DETECT CONTENTS
B1	Power and deflection circuit
X-RAY	X-Ray protection circuit action

REPLACE OF THE CHIP COMPONENT

CAUTIONS

1. Avoid heating for more than 3 seconds.
2. Do not rub the electrodes and the resist parts of the pattern.
3. When removing a chip part, melt the solder adequately.
4. Do not reuse a chip part after removing it.

SOLDERING IRON

1. Use a high insulation soldering iron with a thin pointed end of it.
2. A 30w soldering iron is recommended for easily removing parts.

REPLACEMENT STEPS

1. How to remove Chip parts

Resistors, capacitors, etc.

(1) As shown in the figure, push the part with tweezers and alternately melt the solder at each end.

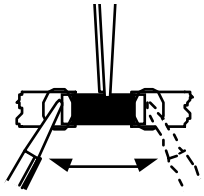

(2) Shift with tweezers and remove the chip part.

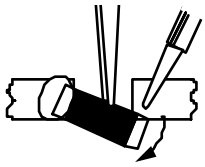

Transistors, diodes, variable resistors, etc.

(1) Apply extra solder to each lead.

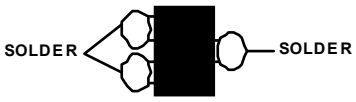

(2) As shown in the figure, push the part with tweezers and alternately melt the solder at each lead. Shift and remove the chip part.

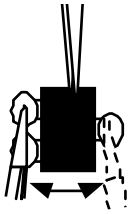

Note : After removing the part, remove remaining solder from the pattern.

2. How to install Chip parts

Resistors, capacitors, etc.

(1) Apply solder to the pattern as indicated in the figure.

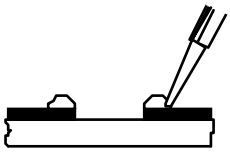

(2) Grasp the chip part with tweezers and place it on the solder. Then heat and melt the solder at both ends of the chip part.

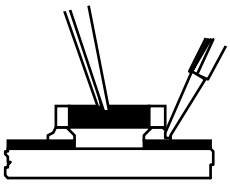

Transistors, diodes, variable resistors, etc.

(1) Apply solder to the pattern as indicated in the figure.

(2) Grasp the chip part with tweezers and place it on the solder.

(3) First solder lead **A** as indicated in the figure.

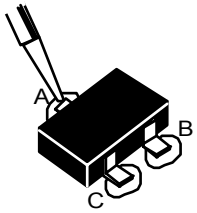

(4) Then solder leads **B** and **C**.

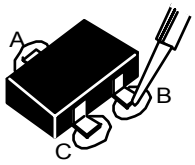

PARTS LIST

CAUTION

- The parts identified by the ⚠ symbol are important for the safety. Whenever replacing these parts, be sure to use specified ones to secure the safety .
- The parts not indicated in this Parts List and those which are filled with lines —— in the Parts No. columns will not be supplied.
- P. W. Board Ass'y will not be supplied, but those which are filled with the Parts No. in the Parts No. columns will be supplied.

ABBREVIATIONS OF RESISTORS, CAPACITORS AND TOLERANCES

RESISTORS		CAPACITORS	
C R	Carbon Resistor	C CAP.	Ceramic Capacitor
F R	Fusible Resistor	E CAP.	Electrolytic Capacitor
P R	Plate Resistor	M CAP.	Mylar Capacitor
V R	Variable Resistor	HV CAP.	High Voltage Capacitor
HV R	High Voltage Resistor	MF CAP.	Metalized Film Capacitor
MF R	Metal Film Resistor	MM CAP.	Metalized Mylar Capacitor
MG R	Metal Glazed Resistor	MP CAP.	Metalized Polystyrol Capacitor
MP R	Metal Plate Resistor	PP CAP.	Polypropylene Capacitor
OM R	Metal Oxide Film Resistor	PS CAP.	Polystyrol Capacitor
CMF R	Coating Metal Film Resistor	TF CAP.	Thin Film Capacitor
UNF R	Non-Flammable Resistor	MPP CAP.	Metalized Polypropylene Capacitor
CH V R	Chip Variable Resistor	TAN. CAP.	Tantalum Capacitor
CH MG R	Chip Metal Glazed Resistor	CH C CAP.	Chip Ceramic Capacitor
COMP. R	Composition Resistor	BP E CAP.	Bi-Polar Electrolytic Capacitor
LPTC R	Linear Positive Temperature Coefficient Resistor	CH AL E CAP.	Chip Aluminum Electrolytic Capacitor
		CH AL BP CAP.	Chip Aluminum Bi-Polar Capacitor
		CH TAN. E CAP.	Chip Tantalum Electrolytic Capacitor
		CH AL BP E CAP.	Chip Tantalum Bi-Polar Electrolytic Capacitor

TOLERANCES									
F	G	J	K	M	N	R	H	Z	P
±1%	±2%	±5%	±10%	±20%	±30%	+30% -10%	+50% -10%	+80% -20%	+100% -0%

CONTENTS

■ USING P.W. BOARD ····· 40
■ EXPLODED VIEW PARTS LIST ····· 41, 42
■ EXPLODED VIEW ····· 41, 43
■ PRINTED WIRING BOARD PARTS LIST
- MAIN PW BOARD ASS'Y ····· 44
- SUB DEF. PW BOARD ASS'Y ····· 46
- CRT SOCKET PW BOARD ASS'Y ····· 47
- FRONT CONTROL PW BOARD ASS'Y ····· 47
- SIGNAL INPUT BOARD ASS'Y ····· 48
- TALLY PW BOARD ASS'Y ····· 52
- SLOT PW BOARD ASS'Y ····· 53

■ PACKING / PACKING PARTS LIST ····· 54

USING P.W. BOARD

Model / P.W.B ASS'Y	TM-H1950CG/E	TM-H1950CG/U
MAIN P.W.B ASS'Y	FX-1162A-H2	←
SUB DEF. P.W.B ASS'Y	FX-2080A-H2	←
CRT SOCKET P.W.B ASS'Y	FX-3068A-H2	←
FRONT CONTROL P.W.B ASS'Y	FX-4068A-H2	←
SIGNAL INPUT P.W.B ASS'Y	FX-6103A-H2	←
TALLY P.W.B ASS'Y	FX-7019A-H2	←
SLOT P.W.B ASS'Y	FX-8022A-H2	←

EXPLODED VIEW PARTS LIST (I)

⚠	Ref.No.	Part No.	Part Name	Description
⚠	1	LC11322-001A-H	FRONT PANEL	
⚠	2	LC40815-001A	TALLY LENZ	
	3	CM48149-A01	JVC MARK	
⚠	4	LC31575-001B-H	PUSH KNOB	(×4)
	5	LC20885-003A-H	CONTROL SHEET	

EXPLODED VIEW (I)

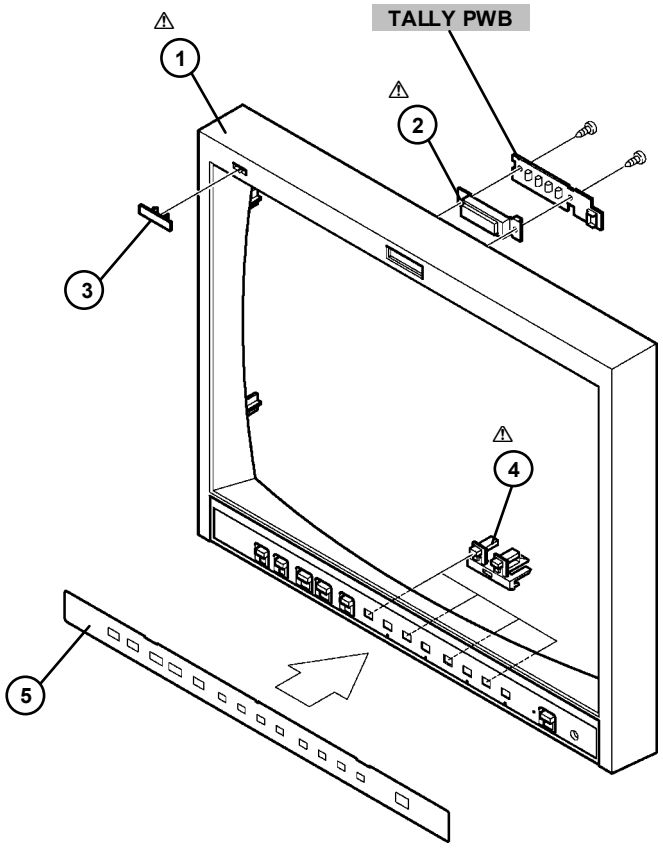

EXPLODED VIEW PARTS LIST (Ⅱ)

⚠	Ref.No.	Part No.	Part Name	Description
⚠	V01	M46AJN13X46	PICTURE TUBE	Inc.DY,PC MAGNET,WEDGE
⚠	L01	QQW0126-001	DEG.COIL	
⚠	T1551	QQH0107-001	F B T	
	6	WJY0001-009A	BRAIDED ASSY	
	8	CHFB119-20BD	FFC WIRE	
⚠	9	CEBSS08P-01KJ2	SPEAKER	SP01
⚠	10	LC11093-001C-H	CHASSIS BASE	
⚠	11	LC31577-001A-H	FBT HOLDER	
⚠	12	LC11288-002B-H	TOP COVER	(SERVICE)
⚠	13	LC20914-001B-H	HANDLE	(×2)
	14	CM44287-00C	ASSY SCREW	(×20)
	15	QYSBSG3006Z	TAPPING SCREW	(×3)
	16	CM44287-00E	ASSY SCREW	(×3)
	17	QNB0036-001	RETAINER	(×2)
⚠	18	QSW0699-001	SEESAW SWITCH	S1
⚠	19	QMCB004-001	3P INLET	J01
	20	QYSBSB3010M	TAPPING SCREW	(×5)
⚠	21	LC11287-002B-C	REAR PANEL	
	22	QYSBSF4012Z	TAPPING SCREW	(×3)
⚠	23	LC20910-001B-0L	RATING LABEL	
⚠	24	LC30475-006A-H	WARNING LABEL	
	25	LC31464-003A-C	SLOT PANEL	
	26	CM47686-00A	FOOT	(×4)
⚠	27	LC11286-001A-H	BOTTOM COVER	
⚠	28	LC11354-001B-H	CONNECT HOLDER	

EXPLODED VIEW (Ⅱ)

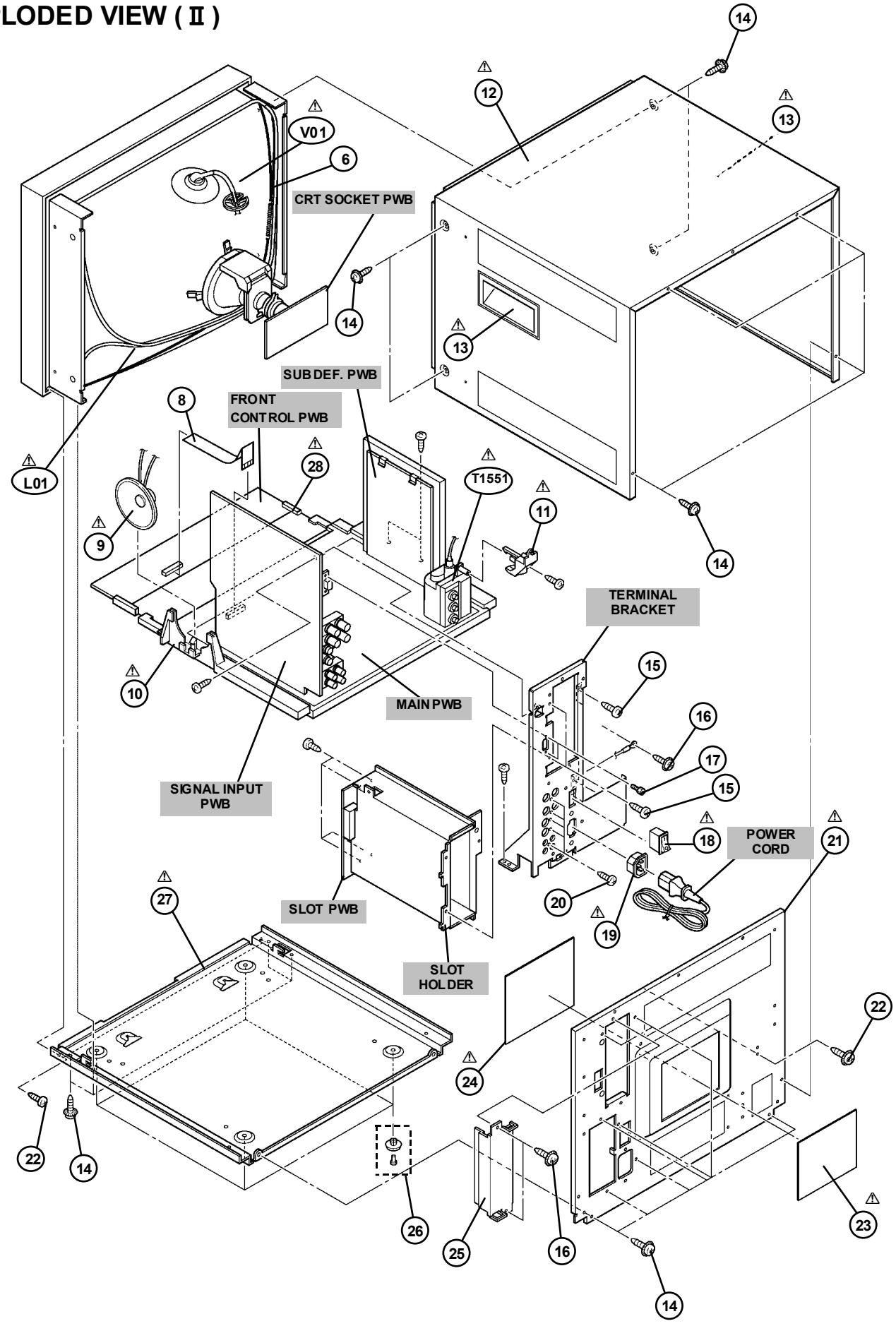

PRINTED WIRING BOARD PARTS LIST

MAIN P.W. BOARD ASS'Y (FX-1162A-H2)

VARIABLE RESISTOR

⚠	Symbol No.	Part No.	Part Name	Description
	VR1901	QVP0053-102Z	V R	1kΩ

RESISTOR

⚠	Symbol No.	Part No.	Part Name	Description
	R1401	QRA14CF-1600Y	MF R	160Ω 1/4W F
	R1402	QRE141J-103Y	C R	10kΩ 1/4W J
	R1403	QRE141J-122Y	C R	1.2kΩ 1/4W J
	R1404	QRX029J-1R2	MF R	1.2Ω 2W J
	R1405	QRG01GJ-101	OM R	100Ω 1W J
	R1406	QRE121J-1R5Y	C R	1.5Ω 1/2W J
	R1407	QRE141J-103Y	C R	10kΩ 1/4W J
	R1408	QRE141J-102Y	C R	1kΩ 1/4W J
	R1410	QRE141J-333Y	C R	33kΩ 1/4W J
	R1411	QRE141J-102Y	C R	1kΩ 1/4W J
	R1412	QRA14CF-8200Y	MF R	820Ω 1/4W F
	R1413	QRE141J-102Y	C R	1kΩ 1/4W J
	R1414	QRE141J-681Y	C R	680Ω 1/4W J
	R1415	QRE121J-223Y	C R	22kΩ 1/2W J
	R1416	QRE141J-681Y	C R	680Ω 1/4W J
	R1417	QRE141J-102Y	C R	1kΩ 1/4W J
	R1420	QRE141J-103Y	C R	10kΩ 1/4W J
	R1421	QRE141J-102Y	C R	1kΩ 1/4W J
	R1422	QRE141J-223Y	C R	22kΩ 1/4W J
	R1423	QRE141J-821Y	C R	820Ω 1/4W J
	R1424	QRE141J-221Y	C R	220Ω 1/4W J
	R1428	QRE141J-103Y	C R	10kΩ 1/4W J
	R1429	QRE141J-102Y	C R	1kΩ 1/4W J
	R1431	QRE141J-223Y	C R	22kΩ 1/4W J
	R1432	QRE141J-682Y	C R	6.8kΩ 1/4W J
	R1433	QRE141J-103Y	C R	10kΩ 1/4W J
	R1434	QRE141J-103Y	C R	10kΩ 1/4W J
	R1435	QRE141J-101Y	C R	100Ω 1/4W J
	R1436	QRE141J-101Y	C R	100Ω 1/4W J
	R1451	QRE141J-392Y	C R	3.9kΩ 1/4W J
	R1453	QRE141J-152Y	C R	1.5kΩ 1/4W J
	R1454	QRE141J-472Y	C R	4.7kΩ 1/4W J
	R1455	QRE141J-822Y	C R	8.2kΩ 1/4W J
	R1456	QRE141J-102Y	C R	1kΩ 1/4W J
	R1457	QRE141J-332Y	C R	3.3kΩ 1/4W J
	R1458	QRE141J-391Y	C R	390Ω 1/4W J
	R1459	QRE141J-102Y	C R	1kΩ 1/4W J
	R1460	QRE141J-331Y	C R	330Ω 1/4W J
	R1461	QRG039J-150	OM R	15Ω 3W J
	R1462	QRG039J-180	OM R	18Ω 3W J
	R1463	QRE141J-102Y	C R	1kΩ 1/4W J
	R1465	QRE141J-122Y	C R	1.2kΩ 1/4W J
	R1505	QRE141J-123Y	C R	12kΩ 1/4W J
	R1506	QRE121J-152Y	C R	1.5kΩ 1/2W J
	R1507	QRG029J-470	OM R	47Ω 2W J
	R1508	QRG029J-330	OM R	33Ω 2W J
	R1509	QRE141J-103Y	C R	10kΩ 1/4W J
	R1510	QRE141J-103Y	C R	10kΩ 1/4W J
	R1521	QRE121J-181Y	C R	180Ω 1/2W J
	R1523	QRG01GJ-220	OM R	22Ω 1W J
	R1524	QRL039J-102	OM R	1kΩ 3W J
	R1525	QRX039J-8R2	MF R	8.2Ω 3W J
⚠	R1551	QRZ9011-1R0	F R	1.0 Ω 1/2W J
⚠	R1552	QRZ9024-R82	F R	0.82 Ω 2W K
⚠	R1553	QRZ9024-R82	F R	0.82 Ω 2W K
⚠	R1554	QRZ9017-4R7	F R	4.7 Ω 1/4W J
	R1555	QRE141J-824Y	C R	820kΩ 1/4W J
	R1557	QRE141J-223Y	C R	22kΩ 1/4W J
	R1558	QRE141J-183Y	C R	18kΩ 1/4W J
	R1559	QRE121J-472Y	C R	4.7kΩ 1/2W J
	R1560	QRE141J-105Y	C R	1MΩ 1/4W J
	R1561	QRE141J-473Y	C R	47kΩ 1/4W J
	R1562	QRE141J-223Y	C R	22kΩ 1/4W J
	R1563	QRE141J-103Y	C R	10kΩ 1/4W J
	R1564	QRE141J-103Y	C R	10kΩ 1/4W J
	R1565	QRE141J-223Y	C R	22kΩ 1/4W J
	R1566	QRE141J-222Y	C R	2.2kΩ 1/4W J
	R1567	QRE141J-105Y	C R	1MΩ 1/4W J
	R1571	QRE141J-561Y	C R	560Ω 1/4W J

RESISTOR

⚠	Symbol No.	Part No.	Part Name	Description
⚠	R1572	QRA14CF-1582Y	MF R	15.8kΩ 1/4W F
⚠	R1573	QRA14CF-5101Y	MF R	5.1kΩ 1/4W F
	R1574	QRE141J-102Y	C R	1kΩ 1/4W J
	R1575	QRE141J-102Y	C R	1kΩ 1/4W J
	R1576	QRE141J-103Y	C R	10kΩ 1/4W J
	R1577	QRE141J-392Y	C R	3.9kΩ 1/4W J
	R1579	QRE141J-223Y	C R	22kΩ 1/4W J
	R1580	QRE141J-223Y	C R	22kΩ 1/4W J
	R1581	QRE141J-332Y	C R	3.3kΩ 1/4W J
	R1582	QRE141J-821Y	C R	820Ω 1/4W J
	R1583	QRE141J-103Y	C R	10kΩ 1/4W J
⚠	R1584	QRZ9011-4R7	F R	4.7 Ω 1/2W J
	R1601	QRE141J-102Y	C R	1kΩ 1/4W J
	R1602	QRK126J-220X	C R	22Ω 1/2W J
	R1603	QRE141J-562Y	C R	5.6kΩ 1/4W J
	R1604	QRE141J-123Y	C R	12kΩ 1/4W J
	R1611	QRE141J-331Y	C R	330Ω 1/4W J
	R1612	QRE141J-103Y	C R	10kΩ 1/4W J
	R1613	QRE141J-822Y	C R	8.2kΩ 1/4W J
	R1614	QRE121J-4R7Y	C R	4.7Ω 1/2W J
	R1617	QRE141J-122Y	C R	1.2kΩ 1/4W J
	R1618	QRE141J-154Y	C R	150kΩ 1/4W J
	R1619	QRE141J-470Y	C R	47Ω 1/4W J
	R1620	QRE141J-223Y	C R	22kΩ 1/4W J
	R1621	QRE141J-563Y	C R	56kΩ 1/4W J
	R1902	QRF154K-4R7	UNF R	4.7Ω 15W K
	R1903	QRG039J-683	OM R	68kΩ 3W J
	R1904	QRL029J-683	OM R	68kΩ 2W J
	R1905	QRE141J-220Y	C R	22Ω 1/4W J
	R1906	QRM059J-R22	MP R	0.22Ω 5W J
	R1907	QRE121J-681Y	C R	680Ω 1/2W J
	R1908	QRE121J-222Y	C R	2.2kΩ 1/2W J
	R1910	QRE141J-332Y	C R	3.3kΩ 1/4W J
	R1920	QRF104K-3R9	UNF R	3.9Ω 10W K
	R1921	QRE121J-224Y	C R	220kΩ 1/2W J
	R1922	QRE121J-564Y	C R	560kΩ 1/2W J
	R1923	QRE141J-680Y	C R	68Ω 1/4W J
	R1924	QRE121J-272Y	C R	2.7kΩ 1/2W J
	R1925	QRE141J-472Y	C R	4.7kΩ 1/4W J
	R1926	QRE121J-681Y	C R	680Ω 1/2W J
	R1927	QRE121J-2R7Y	C R	2.7Ω 1/2W J
	R1928	QRE121J-224Y	C R	220kΩ 1/2W J
	R1948	QRE141J-183Y	C R	18kΩ 1/4W J
	R1949	QRE141J-154Y	C R	150kΩ 1/4W J
⚠	R1950	QRA14CF-1502Y	MF R	15kΩ 1/4W F
⚠	R1951	QRA14CF-1502Y	MF R	15kΩ 1/4W F
⚠	R1954	QRA14CF-4701Y	MF R	4.7kΩ 1/4W F
	R1955	QRT029J-R56	MF R	0.56Ω 2W J
	R1956	QRT029J-R56	MF R	0.56Ω 2W J
	R1958	QRE141J-272Y	C R	2.7kΩ 1/4W J
	R1959	QRE141J-183Y	C R	18kΩ 1/4W J
	R1960	QRE141J-562Y	C R	5.6kΩ 1/4W J
⚠	R1971	QRZ9021-3R9	F R	3.9 Ω 1W J
	R1972	QRL029J-220	OM R	22Ω 2W J
	R1974	QRL029J-220	OM R	22Ω 2W J
⚠	R1975	QRZ9024-R56	F R	0.56 Ω 2W K
⚠	R1976	QRZ9021-4R7	F R	4.7 Ω 1W J
⚠	R1977	QRZ9024-R33	F R	0.33 Ω 2W K
	R1980	QRE121J-331Y	C R	330Ω 1/2W J
	R1982	QRE141J-102Y	C R	1kΩ 1/4W J
	R1983	QRE141J-472Y	C R	4.7kΩ 1/4W J
	R1984	QRE141J-103Y	C R	10kΩ 1/4W J
	R1985	QRE141J-103Y	C R	10kΩ 1/4W J
	R1986	QRE141J-681Y	C R	680Ω 1/4W J
	R1987	QRE141J-103Y	C R	10kΩ 1/4W J
	R1988	QRE141J-681Y	C R	680Ω 1/4W J

CAPACITOR

Symbol No.	Part No.	Part Name	Description
C1401	QFLC1HJ-102Z	M CAP.	1000pF 50V J
C1402	QEHR1VM-477Z	E CAP.	470μF 35V M
C1403	QFV71HJ-824Z	MF CAP.	0.82μF 50V J

⚠	Symbol No.	Part No.	Part Name	Description
	CAPACITOR			
	C1404	QFV71HJ-824Z	MF CAP.	0.82µF 50V J
	C1405	QEHR1CM-107Z	E CAP.	100µF 16V M
	C1406	QFLC2AK-103Z	M CAP.	0.01µF 100V K
	C1408	QFV71HJ-474Z	MF CAP.	0.47µF 50V J
	C1409	QFLC1HJ-103Z	M CAP.	0.01µF 50V J
	C1410	QFV71HJ-104Z	MF CAP.	0.1µF 50V J
	C1412	QCS31HJ-101Z	C CAP.	100pF 50V J
	C1414	QBTC1CK-225Z	TAN.CAP.	2.2µF 16V K
	C1415	QFV71HJ-105Z	MF CAP.	1µF 50V J
	C1416	QFLC1HJ-223Z	M CAP.	0.022µF 50V J
	C1417	QFLC1HJ-102Z	M CAP.	1000pF 50V J
	C1418	QETN1EM-476Z	E CAP.	47µF 25V M
	C1419	QFLC1HJ-102Z	M CAP.	1000pF 50V J
	C1421	QCS31HJ-101Z	C CAP.	100pF 50V J
	C1423	QETN1EM-476Z	E CAP.	47µF 25V M
	C1424	QCS31HJ-101Z	C CAP.	100pF 50V J
	C1425	QCS31HJ-101Z	C CAP.	100pF 50V J
	C1431	QCB31HK-332Z	C CAP.	3300pF 50V K
	C1451	QFV71HJ-104Z	MF CAP.	0.1µF 50V J
	C1452	QCS31HJ-101Z	C CAP.	100pF 50V J
	C1453	QEZ0470-475	E CAP.	4.7µF 50V M
	C1454	QCS31HJ-101Z	C CAP.	100pF 50V J
	C1455	QCS31HJ-101Z	C CAP.	100pF 50V J
	C1456	QCS31HJ-101Z	C CAP.	100pF 50V J
	C1457	QCS31HJ-101Z	C CAP.	100pF 50V J
	C1458	QCS31HJ-101Z	C CAP.	100pF 50V J
	C1459	QCS31HJ-101Z	C CAP.	100pF 50V J
	C1502	QCB32HK-681Z	C CAP.	680pF 500V K
	C1503	QEM61HK-225Z	E CAP.	2.2µF 50V K
⚠	C1521	QFZ0196-202	MPP CAP.	2000pF 1.5kVH±3%
	C1527	QEHQ2AM-477	E CAP.	470µF 100V M
	C1528	QCZ0325-561	C CAP.	560pF 2kV K
	C1529	QFLC1HJ-473Z	M CAP.	0.047µF 50V J
	C1555	QEHQ2CM-107	E CAP.	100µF 160V M
	C1556	QETM1CM-478	E CAP.	4700µF 16V M
	C1557	QETM1CM-478	E CAP.	4700µF 16V M
	C1561	QCS31HJ-271Z	C CAP.	270pF 50V J
	C1562	QFLC1HJ-223Z	M CAP.	0.022µF 50V J
	C1563	QEM61HK-225Z	E CAP.	2.2µF 50V K
	C1564	QFLC1HJ-223Z	M CAP.	0.022µF 50V J
	C1571	QCB31HK-682Z	C CAP.	6800pF 50V K
	C1572	QETN2AM-106Z	E CAP.	10µF 100V M
	C1573	QETN1HM-105Z	E CAP.	1µF 50V M
	C1574	QENC1EM-107Z	BP E CAP.	100µF 25V M
	C1575	QEHR1EM-107Z	E CAP.	100µF 25V M
	C1576	QCS31HJ-221Z	C CAP.	220pF 50V J
	C1577	QCS31HJ-221Z	C CAP.	220pF 50V J
	C1578	QETN1AM-227Z	E CAP.	220µF 10V M
	C1601	QFLC1HJ-103Z	M CAP.	0.01µF 50V J
	C1602	QEHR1EM-108Z	E CAP.	1000µF 25V M
	C1603	QFV71HJ-124Z	MF CAP.	0.12µF 50V J
	C1604	QCB31HK-103Z	C CAP.	0.01µF 50V K
	C1605	QEHR1HM-225Z	E CAP.	2.2µF 50V M
	C1611	QETN1HM-106Z	E CAP.	10µF 50V M
	C1612	QFLC1HJ-104Z	M CAP.	0.1µF 50V J
	C1613	QEHR1EM-227Z	E CAP.	220µF 25V M
	C1614	QFLC1HJ-473Z	M CAP.	0.047µF 50V J
	C1615	QEHR1EM-108Z	E CAP.	1000µF 25V M
	C1616	QEHR1HM-475Z	E CAP.	4.7µF 50V M
	C1617	QETN1EM-476Z	E CAP.	47µF 25V M
	C1618	QFLC1HJ-103Z	M CAP.	0.01µF 50V J
	C1619	QEHQ1EM-228	E CAP.	2200µF 25V M
⚠	C1901	QFZ9036-104	MF CAP.	0.1µFAC250V M
⚠	C1902	QFZ9036-104	MF CAP.	0.1µFAC250V M
⚠	C1903	QCZ9078-472	C CAP.	4700pFAC250V M
⚠	C1904	QCZ9078-472	C CAP.	4700pFAC250V M
⚠	C1905	QETN2GM-105Z	E CAP.	1µF 400V M
	C1906	QCB32HK-472Z	C CAP.	4700pF 500V K
	C1907	QCB32HK-472Z	C CAP.	4700pF 500V K
	C1910	QCZ0325-681	C CAP.	680pF 2kV K
	C1911	QEZ0650-337	E CAP.	330µF
	C1912	QETN1HM-476Z	E CAP.	47µF 50V M
	C1914	QCB31HK-102Z	C CAP.	1000pF 50V K
	C1915	QFLC1HJ-103Z	M CAP.	0.01µF 50V J
	C1916	QCS31HJ-471Z	C CAP.	470pF 50V J
⚠	C1930	QCZ9054-472	C CAP.	4700pFAC250V Z
⚠	C1931	QCZ9054-472	C CAP.	4700pFAC250V Z
⚠	C1932	QCZ9054-472	C CAP.	4700pFAC250V Z
⚠	C1933	QETM2GM-226	E CAP.	22µF 400V M

⚠	Symbol No.	Part No.	Part Name	Description
	CAPACITOR			
	C1934	QCZ0325-222	C CAP.	2200pF 2kV K
	C1935	QCZ0325-151	C CAP.	150pF 2kV K
	C1936	QCS31HJ-471Z	C CAP.	470pF 50V J
	C1937	QCB31HK-222Z	C CAP.	2200pF 50V K
	C1938	QFLC1HJ-103Z	M CAP.	0.01µF 50V J
	C1939	QEHR1HM-475Z	E CAP.	4.7µF 50V M
	C1941	QCS31HJ-391Z	C CAP.	390pF 50V J
	C1942	QETN1AM-107Z	E CAP.	100µF 10V M
	C1943	QETN1HM-105Z	E CAP.	1µF 50V M
	C1944	QFN32AK-102Z	M CAP.	1000pF 100V K
	C1971	QCZ9078-152	C CAP.	1500pFAC250V M
	C1975	QEZ0203-227	E CAP.	220µF 160V M
	C1976	QEZ0203-227	E CAP.	220µF 160V M
	C1977	QEHR1EM-228Z	E CAP.	2200µF 25V M
	C1978	QEHR1EM-108Z	E CAP.	1000µF 25V M
	C1979	QETN1EM-477Z	E CAP.	470µF 25V M
	C1980	QEHR1CM-108Z	E CAP.	1000µF 16V M
	C1982	QEHR1CM-107Z	E CAP.	100µF 16V M
	C1983	QEHR1EM-108Z	E CAP.	1000µF 25V M
	C1984	QEHR1CM-477Z	E CAP.	470µF 16V M
	C1985	QEHR1EM-477Z	E CAP.	470µF 25V M
	C1986	QEHR1CM-477Z	E CAP.	470µF 16V M
	C1987	QTMM1VM-108	E CAP.	1000µF 35V M
	C1988	QFLC1HJ-473Z	M CAP.	0.047µF 50V J
⚠	C1990	QCZ9079-472	C CAP.	4700pFAC250V M
⚠	C1991	QCZ9079-472	C CAP.	4700pFAC250V M
⚠	C1992	QCZ9079-102	C CAP.	1000pFAC250V M
⚠	C1993	QCZ9079-102	C CAP.	1000pFAC250V M
	C1994	QCS31HJ-101Z	C CAP.	100pF 50V J
	TRANSF			
	T1501	QQR1032-001	HOR DRIVE TRANSF.	
⚠	T1551	QQH0107-001	F B T	
⚠	T1901	QQS0129-001	SW TRANSF.	
⚠	T1902	QQS0130-001	SW TRANSF.	
	COIL			
	L1461	QQR0993-001	CHOKE COIL	
	L1523	QQL43AJ-222	COIL	2.2mH J
	L1551	QQLZ026-260	HEATER CHOKE	
	L1552	QQL50AM-8R2Z	CHOKE COIL	
	L1971	QQL26AK-560Z	COIL	56µH K
	L1972	QQL26AK-560Z	COIL	56µH K
	L1973	QQL26AK-220Z	COIL	22µH K
	DIODE			
	D1401	1SS133-T2	SI.DIODE	
	D1402	RD6.2E/B/-T2	ZENER DIODE	
	D1403	1SR35-400A-T2	DIODE	
	D1404	1SS133-T2	SI.DIODE	
	D1405	MTZJ6.8C-T2	ZENER DIODE	
	D1406	1SS133-T2	SI.DIODE	
	D1407	MTZJ18A-T2	ZENER DIODE	
	D1408	MA4022/L/-T2	ZENER DIODE	
	D1409	MTZJ12C-T2	ZENER DIODE	
	D1521	RH3G-F1	SI.DIODE	
	D1522	FMP-3FU-F1	SI.DIODE	
	D1524	1SS133-T2	SI.DIODE	
	D1551	RGP10J-5025-T3	SI.DIODE	
	D1552	RU3Q-F1	SI.DIODE	
	D1553	RU3Q-F1	SI.DIODE	
	D1554	MTZJ6.8C-T2	ZENER DIODE	
	D1555	MTZJ6.8C-T2	ZENER DIODE	
	D1556	1SS133-T2	SI.DIODE	
	D1557	1SS133-T2	SI.DIODE	
	D1562	EU2A-T3	SI.DIODE	
	D1571	1SS133-T2	SI.DIODE	
	D1572	MTZJ6.8C-T2	ZENER DIODE	
	D1573	1SS133-T2	SI.DIODE	
	D1574	1SS133-T2	SI.DIODE	
	D1575	1SS244-T2	SI.DIODE	
	D1576	1SS133-T2	SI.DIODE	
	D1577	1SS244-T2	SI.DIODE	
	D1578	1SS133-T2	SI.DIODE	
⚠	D1579	MA4068N/Z1/-T2	ZENER DIODE	
	D1580	MTZJ4.3A-T2	ZENER DIODE	

⚠	Symbol No.	Part No.	Part Name	Description
	DIODE			
	D1603	1SS133-T2	SI.DIODE	
	D1605	MTZJ11A-T2	ZENER DIODE	
	D1606	1SS133-T2	SI.DIODE	
⚠	D1901	D3SB60	BRIDGE DIODE	
	D1902	RU1C-LFC4	SI.DIODE	
	D1903	RGP10J-5025-T3	SI.DIODE	
	D1904	RGP10J-5025-T3	SI.DIODE	
	D1905	1SS133-T2	SI.DIODE	
	D1906	1SS133-T2	SI.DIODE	
⚠	D1920	S1WB/A/60-4101	BRIDGE DIODE	
	D1921	RU1C-LFC4	SI.DIODE	
	D1922	AU01Z-T2	SI.DIODE	
	D1923	AU01Z-T2	SI.DIODE	
	D1924	1SS133-T2	SI.DIODE	
	D1939	1SS133-T2	SI.DIODE	
⚠	D1940	MA4068N/Z1/-T2	ZENER DIODE	
	D1941	MTZJ7.5S-T2	ZENER DIODE	
	D1942	1SS133-T2	SI.DIODE	
	D1971	RU3D-F1	SI.DIODE	
	D1972	RU3D-F1	SI.DIODE	
	D1973	RU3YX-LFC4	SI.DIODE	
	D1974	RU3YX-LFC4	SI.DIODE	
	D1977	RU3YX-LFC4	SI.DIODE	
	D1978	RU3YX-LFC4	SI.DIODE	
	D1980	NJM431L-T	IC	
	D1981	1SS133-T2	SI.DIODE	
	D1982	1SS133-T2	SI.DIODE	
	D1983	MTZJ3.9B-T2	ZENER DIODE	
	D1984	1SS133-T2	SI.DIODE	
	TRANSISTOR			
	Q1401	2SC3311A/QR/-T	SI.TRANSISTOR	
	Q1402	2SC3311A/QR/-T	SI.TRANSISTOR	
	Q1403	2SC3311A/QR/-T	SI.TRANSISTOR	
	Q1405	2SC3311A/QR/-T	SI.TRANSISTOR	
	Q1431	DTC124ESA-T	DIGI.TRANSISTOR	
	Q1451	2SC3311A/QR/-T	SI.TRANSISTOR	
	Q1452	2SC3311A/QR/-T	SI.TRANSISTOR	
	Q1453	2SA1309A/QR/-T	SI.TRANSISTOR	
	Q1454	2SD1408/OY/-LB	POWER TRANSISTOR	
	Q1501	BSN304-T	MOS FET	
	Q1502	2SC1627A/OY/-T	SI.TRANSISTOR	
	Q1503	2SA965/OY/-T	SI.TRANSISTOR	
	Q1504	2SC3311A/QR/-T	SI.TRANSISTOR	
	Q1505	2SC3311A/QR/-T	SI.TRANSISTOR	
⚠	Q1521	2SC5451-YD	POWER TRANSISTOR	H.OUT
	Q1551	DTC124ESA-T	DIGI.TRANSISTOR	
	Q1571	2SC3311A/QR/-T	SI.TRANSISTOR	
	Q1573	2SA1309A/QR/-T	SI.TRANSISTOR	
	Q1574	2SC2785/JH/-T	SI.TRANSISTOR	
	Q1601	2SC3311A/QR/-T	SI.TRANSISTOR	
	Q1602	2SA1309A/QR/-T	SI.TRANSISTOR	
	Q1603	2SC3311A/QR/-T	SI.TRANSISTOR	
	Q1604	2SC3311A/QR/-T	SI.TRANSISTOR	
	Q1932	2SA949/Y/Z1-T	SI.TRANSISTOR	
	Q1933	2SC2229/Y/-T	SI.TRANSISTOR	
	Q1934	2SC3311A/QR/-T	SI.TRANSISTOR	
	Q1935	2SC3311A/QR/-T	SI.TRANSISTOR	
	IC			
	IC1401	LA7841	I.C.	
	IC1411	TA1241AN	I.C.	
	IC1451	NJM4560D	I.C.	
	IC1601	AN5265	I.C.	
	IC1901	STR-F6456S/F7	I.C.	
	IC1902	STR-L472/F7	I.C.	
⚠	IC1905	TLP721F(D4-GR)	PHOTO COUPLER	
⚠	IC1906	PC123FY2	FEED BACK	
	IC1971	BA17809T	I.C.	
	IC1973	BA12T	I.C.	
	OTHERS			
		CEMG002-001Z	FUSE CLIP	
	CN1001	QGB1505J1-25	B TO B CONNECTOR	
	CN1002	QGB1505J1-25	B TO B CONNECTOR	
	CN1003	QGBA001K1-04	B TO B CONNECTOR	
	CN1004	QGBA001K1-04	B TO B CONNECTOR	

⚠	Symbol No.	Part No.	Part Name	Description
	OTHERS			
⚠	CP1971	ICP-N10-Y	I.C.PROTECT	
⚠	CP1972	ICP-N25-Y	I.C.PROTECT	
⚠	CP1973	ICP-N10-Y	I.C.PROTECT	
⚠	CP1975	QMFZ043-2R0Z-J1	FUSE	2.0A
⚠	F1901	QMF51D2-5R0-J1	FUSE	5.0A
	K1901	CE42050-001Z	BEADS CORE	
	K1972	CE41433-001Z	BEADS CORE	
	K1973	CE42050-001Z	BEADS CORE	
	K1974	CE42050-001Z	BEADS CORE	
⚠	LF1901	QQR0676-001	LINE FILTER	
⚠	RY1401	CESK024-001	RELAY	
⚠	RY1901	QSK0119-001	RELAY	
⚠	RY1902	QSK0119-001	RELAY	
⚠	TH1901	QAD0132-4R5	W-PTC	

SUB DEF. P.W. BOARD ASS'Y (FX-2080A-H2)

⚠	Symbol No.	Part No.	Part Name	Description
	RESISTOR			
	R2439	QRE141J-152Y	C R	1.5kΩ 1/4W J
	R2440	QRE141J-182Y	C R	1.8kΩ 1/4W J
	R2441	QRE141J-183Y	C R	18kΩ 1/4W J
	R2442	QRE141J-272Y	C R	2.7kΩ 1/4W J
	R2522	QRG029J-103	OM R	10kΩ 2W J
	R2526	QRG029J-102	OM R	1kΩ 2W J
	R2530	QRE121J-184Y	C R	180kΩ 1/2W J
	R2531	QRE121J-184Y	C R	180kΩ 1/2W J
	R2532	QRE121J-184Y	C R	180kΩ 1/2W J
	R2533	QRE121J-184Y	C R	180kΩ 1/2W J
	R2534	QRE121J-184Y	C R	180kΩ 1/2W J
	R2536	QRZ0056-103Z	COMP R	10kΩ 1/2W K
	CAPACITOR			
	C2460	QFV71HJ-824Z	MF CAP.	0.82µF 50V J
	C2461	QETN1EM-476Z	E CAP.	47µF 25V M
	C2462	QFV71HJ-824Z	MF CAP.	0.82µF 50V J
	C2520	QFZ0197-335	MPP CAP.	3.3µF 250V J
⚠	C2522	QFZ0196-123	MPP CAP.	0.012µF1.5kVH±3%
⚠	C2523	QFP32GJ-153	PP CAP.	0.015µF 400V J
	C2524	QFZ0197-125	MPP CAP.	1.2µF 250V J
	C2525	QETN2CM-475Z	E CAP.	4.7µF 160V M
	C2526	QFZ0197-154	MPP CAP.	0.15µF 250V J
	C2527	QFZ0196-482	MPP CAP.	4800pF1.5kVH±3%
⚠	C2528	QFZ0196-432	MPP CAP.	4300pF1.5kVH±3%
	C2530	QCB32HK-682	C CAP.	6800pF 500V K
	C2531	QFZ0122-682	MPP CAP.	6800pF1.8kVH±3%
	TRANSF			
	T2502	QQR1096-001	DEF TRANSF.	
	COIL			
	L2521	QQR1165-002	LINEARITY COIL	
	L2522	QQR1268-001	CHOKE COIL	
	DIODE			
	D2523	BYD33G-T3	SI.DIODE	
	D2527	ES1F-LFG2	SI.DIODE	
	D2528	ES1F-LFG2	SI.DIODE	
	TRANSISTOR			
	Q2462	2SC1815/YG/-T	SI.TRANSISTOR	
	Q2463	2SC4686A	POWER TRANSISTOR	
	OTHERS			
	CN2003	QGBA001J1-04	B TO B CONNECTOR	
	CN2004	QGBA001J1-04	B TO B CONNECTOR	

CRT SOCKET P.W. BOARD ASS'Y (FX-3068A-H2)

⚠	Symbol No.	Part No.	Part Name	Description
	RESISTOR			
	R3302	QRE141J-101Y	C R	100Ω 1/4W J
	R3303	QRE141J-101Y	C R	100Ω 1/4W J
	R3304	QRE141J-101Y	C R	100Ω 1/4W J
	R3305	QRZ0111-102	C R	1.0kΩ 1/2W K
	R3306	QRL029J-183	OM R	18kΩ 2W J
	R3307	QRL029J-183	OM R	18kΩ 2W J
	R3308	QRZ0111-102	C R	1.0kΩ 1/2W K
	R3309	QRL029J-183	OM R	18kΩ 2W J
	R3310	QRL029J-183	OM R	18kΩ 2W J
	R3311	QRZ0111-102	C R	1.0kΩ 1/2W K
	R3312	QRL029J-183	OM R	18kΩ 2W J
	R3313	QRL029J-183	OM R	18kΩ 2W J
	R3315	QRZ0107-105Z	C R	1.0MΩ 1/2W K
	R3316	QRZ0111-102	C R	1.0kΩ 1/2W K
	R3317	QRZ0111-474	C R	470kΩ 1/2W K
	R3318	QRE141J-101Y	C R	100Ω 1/4W J
	R3319	QRE141J-101Y	C R	100Ω 1/4W J
	R3320	QRE141J-101Y	C R	100Ω 1/4W J
	R3321	QRE141J-121Y	C R	120Ω 1/4W J
	R3322	QRE141J-101Y	C R	100Ω 1/4W J
	R3323	QRE141J-680Y	C R	68Ω 1/4W J
	R3324	QRE141J-152Y	C R	1.5kΩ 1/4W J
	R3325	QRE141J-121Y	C R	120Ω 1/4W J
	R3326	QRE141J-101Y	C R	100Ω 1/4W J
	R3327	QRE141J-820Y	C R	82Ω 1/4W J
	R3328	QRE141J-152Y	C R	1.5kΩ 1/4W J
	R3329	QRE141J-121Y	C R	120Ω 1/4W J
	R3330	QRE141J-101Y	C R	100Ω 1/4W J
	R3331	QRE141J-680Y	C R	68Ω 1/4W J
	R3332	QRE141J-152Y	C R	1.5kΩ 1/4W J
	R3333	QRE141J-221Y	C R	220Ω 1/4W J
	R3334	QRE141J-221Y	C R	220Ω 1/4W J
	R3337	QRE141J-101Y	C R	100Ω 1/4W J
	R3338	QRE141J-103Y	C R	10kΩ 1/4W J
	R3339	QRE141J-103Y	C R	10kΩ 1/4W J
	R3340	QRE141J-103Y	C R	10kΩ 1/4W J
	CAPACITOR			
	C3301	QETN1CM-107Z	E CAP.	100µF 16V M
	C3303	QFLC1HJ-103Z	M CAP.	0.01µF 50V J
	C3305	QETM2EM-336	E CAP.	33µF 250V M
	C3306	QETN2EM-105Z	E CAP.	1µF 250V M
	C3307	QCZ0121-102	C CAP.	1000pF 3kV Z
	C3308	QCS31HJ-330Z	C CAP.	33pF 50V J
	C3309	QCS31HJ-471Z	C CAP.	470pF 50V J
	C3310	QCS31HJ-330Z	C CAP.	33pF 50V J
	C3311	QCS31HJ-391Z	C CAP.	390pF 50V J
	C3312	QCS31HJ-330Z	C CAP.	33pF 50V J
	C3313	QCS31HJ-391Z	C CAP.	390pF 50V J
	C3314	QCS31HJ-221Z	C CAP.	220pF 50V J
	C3315	QCS31HJ-221Z	C CAP.	220pF 50V J
	C3316	QCS31HJ-221Z	C CAP.	220pF 50V J
	C3318	QCS31HJ-330Z	C CAP.	33pF 50V J
	COIL			
	L3302	QQL244J-151Z	COIL	150µH J
	L3304	QQL244J-151Z	COIL	150µH J
	L3306	QQL244J-151Z	COIL	150µH J
	DIODE			
	D3301	RGP10J-5025-T3	SI.DIODE	
	TRANSISTOR			
	Q3301	2SC4544-LB	POWER TRANSISTOR	
	Q3302	2SC4544-LB	POWER TRANSISTOR	
	Q3303	2SC4544-LB	POWER TRANSISTOR	
	Q3304	2SC3311A/QR/-T	SI.TRANSISTOR	
	Q3305	2SC3311A/QR/-T	SI.TRANSISTOR	
	Q3306	2SC3311A/QR/-T	SI.TRANSISTOR	
	Q3307	2SC3311A/QR/-T	SI.TRANSISTOR	
	OTHERS			
⚠	SK3001	CE42670-001	CRT SOCKET	

FRONT CONTROL P.W. BOARD ASS'Y (FX-4068A-H2)

⚠	Symbol No.	Part No.	Part Name	Description
	RESISTOR			
	R4801	QRE141J-562Y	C R	5.6kΩ 1/4W J
	R4802	QRE141J-332Y	C R	3.3kΩ 1/4W J
	R4803	QRE141J-562Y	C R	5.6kΩ 1/4W J
	R4804	QRE141J-332Y	C R	3.3kΩ 1/4W J
	R4805	QRE141J-562Y	C R	5.6kΩ 1/4W J
	R4806	QRE141J-332Y	C R	3.3kΩ 1/4W J
	R4807	QRE141J-562Y	C R	5.6kΩ 1/4W J
	R4808	QRE141J-332Y	C R	3.3kΩ 1/4W J
	R4809	QRE141J-332Y	C R	3.3kΩ 1/4W J
	DIODE			
	D4801	GL3ED8	L E D	
	D4802	SLR-342MG3F	L E D	
	D4803	SLR-342MG3F	L E D	
	D4804	SLR-342MG3F	L E D	
	D4805	SLR-342MG3F	L E D	
	D4806	SLR-342MG3F	L E D	
	D4807	SLR-342MG3F	L E D	
	D4808	SLR-342MG3F	L E D	
	D4809	SLR-342MG3F	L E D	
	OTHERS			
		LC30349-001A-H	LED HOLDER	
		LC31576-001B-H	LED HOLDER	
	S4801	QSW0619-003Z	PUSH SWITCH	POWER
	S4802	QSW0619-003Z	PUSH SWITCH	INPUT_D
	S4803	QSW0619-003Z	PUSH SWITCH	INPUT_C
	S4804	QSW0619-003Z	PUSH SWITCH	INPUT_B VIDEO/YC
	S4805	QSW0619-003Z	PUSH SWITCH	INPUT_A
	S4806	QSW0619-003Z	PUSH SWITCH	ASPECT
	S4807	QSW0619-003Z	PUSH SWITCH	BLUE BACK
	S4808	QSW0619-003Z	PUSH SWITCH	COLOR OFF
	S4809	QSW0619-003Z	PUSH SWITCH	UNDER SCAN
	S4810	QSW0619-003Z	PUSH SWITCH	MENU
	S4811	QSW0619-003Z	PUSH SWITCH	UP
	S4812	QSW0619-003Z	PUSH SWITCH	DOWN
	S4813	QSW0619-003Z	PUSH SWITCH	CONT/BRIGHT
	S4814	QSW0619-003Z	PUSH SWITCH	CHROMA/PHASE

SIGNAL INPUT P.W. BOARD ASS'Y (FX-6103A-H2)

⚠	Symbol No.	Part No.	Part Name	Description	
	RESISTOR				
	R6001	NRSA63J-101X	MG R	100Ω 1/16W	J
	R6002	NRSA63J-101X	MG R	100Ω 1/16W	J
	R6003	NRSA63J-101X	MG R	100Ω 1/16W	J
	R6004	NRSA63J-101X	MG R	100Ω 1/16W	J
	R6006	NRSA63J-101X	MG R	100Ω 1/16W	J
	R6007	NRSA63J-101X	MG R	100Ω 1/16W	J
	R6008	NRSA63J-101X	MG R	100Ω 1/16W	J
	R6009	NRSA63J-101X	MG R	100Ω 1/16W	J
	R6010	NRSA63J-103X	MG R	10kΩ 1/16W	J
	R6011	NRSA63J-103X	MG R	10kΩ 1/16W	J
	R6012	NRSA63J-103X	MG R	10kΩ 1/16W	J
	R6013	NRSA63J-103X	MG R	10kΩ 1/16W	J
	R6014	NRSA63J-103X	MG R	10kΩ 1/16W	J
	R6015	NRSA63J-103X	MG R	10kΩ 1/16W	J
	R6016	NRSA63J-103X	MG R	10kΩ 1/16W	J
	R6017	NRSA63J-103X	MG R	10kΩ 1/16W	J
	R6018	NRSA63J-103X	MG R	10kΩ 1/16W	J
	R6019	NRSA63J-101X	MG R	100Ω 1/16W	J
	R6020	NRSA63J-101X	MG R	100Ω 1/16W	J
	R6021	NRSA02F-750X	MG R	75Ω 1/10W	F
	R6022	NRSA63J-471X	MG R	470Ω 1/16W	J
	R6023	NRSA63J-473X	MG R	47kΩ 1/16W	J
	R6024	NRSA63J-333X	MG R	33kΩ 1/16W	J
	R6025	NRSA63J-103X	MG R	10kΩ 1/16W	J
	R6026	NRSA02F-750X	MG R	75Ω 1/10W	F
	R6027	NRSA63J-471X	MG R	470Ω 1/16W	J
	R6028	NRSA63J-473X	MG R	47kΩ 1/16W	J
	R6029	NRSA63J-333X	MG R	33kΩ 1/16W	J
	R6030	NRSA63J-103X	MG R	10kΩ 1/16W	J
	R6031	NRSA02F-750X	MG R	75Ω 1/10W	F
	R6032	NRSA63J-471X	MG R	470Ω 1/16W	J
	R6033	NRSA63J-473X	MG R	47kΩ 1/16W	J
	R6034	NRSA63J-333X	MG R	33kΩ 1/16W	J
	R6035	NRSA63J-103X	MG R	10kΩ 1/16W	J
	R6036	NRSA02F-750X	MG R	75Ω 1/10W	F
	R6037	NRSA63J-471X	MG R	470Ω 1/16W	J
	R6039	NRSA63J-103X	MG R	10kΩ 1/16W	J
	R6043	NRSA63J-103X	MG R	10kΩ 1/16W	J
	R6047	NRSA63J-104X	MG R	100kΩ 1/16W	J
	R6048	NRSA63J-101X	MG R	100Ω 1/16W	J
	R6049	NRSA63J-101X	MG R	100Ω 1/16W	J
	R6050	NRSA63J-101X	MG R	100Ω 1/16W	J
	R6055	NRSA63J-101X	MG R	100Ω 1/16W	J
	R6057	NRSA63J-102X	MG R	1kΩ 1/16W	J
	R6101	NRSA63J-102X	MG R	1kΩ 1/16W	J
	R6102	NRSA63J-332X	MG R	3.3kΩ 1/16W	J
	R6103	NRSA63J-102X	MG R	1kΩ 1/16W	J
	R6104	NRSA63J-102X	MG R	1kΩ 1/16W	J
	R6105	NRSA63J-103X	MG R	10kΩ 1/16W	J
	R6106	NRSA63J-221X	MG R	220Ω 1/16W	J
	R6107	NRSA63J-101X	MG R	100Ω 1/16W	J
	R6108	NRSA63J-101X	MG R	100Ω 1/16W	J
	R6109	NRSA63J-101X	MG R	100Ω 1/16W	J
	R6110	NRSA63J-682X	MG R	6.8kΩ 1/16W	J
	R6111	NRSA63J-821X	MG R	820Ω 1/16W	J
	R6112	NRSA63J-0R0X	MG R	0.0Ω 1/16W	J
	R6113	NRSA63J-152X	MG R	1.5kΩ 1/16W	J
	R6114	NRSA63J-102X	MG R	1kΩ 1/16W	J
	R6115	NRSA63J-331X	MG R	330Ω 1/16W	J
	R6116	NRSA63J-473X	MG R	47kΩ 1/16W	J
	R6118	NRSA63J-472X	MG R	4.7kΩ 1/16W	J
	R6119	NRSA63J-102X	MG R	1kΩ 1/16W	J
	R6120	NRSA63J-102X	MG R	1kΩ 1/16W	J
	R6121	NRSA63J-102X	MG R	1kΩ 1/16W	J
	R6122	NRSA63J-222X	MG R	2.2kΩ 1/16W	J
	R6123	NRSA63J-123X	MG R	12kΩ 1/16W	J
	R6124	NRSA63J-103X	MG R	10kΩ 1/16W	J
	R6125	NRSA63J-101X	MG R	100Ω 1/16W	J
	R6126	NRSA63J-472X	MG R	4.7kΩ 1/16W	J
	R6129	NRSA63J-103X	MG R	10kΩ 1/16W	J
	R6130	NRSA63J-102X	MG R	1kΩ 1/16W	J
	R6131	NRSA63J-332X	MG R	3.3kΩ 1/16W	J
	R6132	NRSA63J-152X	MG R	1.5kΩ 1/16W	J
	R6133	NRSA63J-222X	MG R	2.2kΩ 1/16W	J
	R6134	NRSA63J-101X	MG R	100Ω 1/16W	J
	R6135	NRSA63J-152X	MG R	1.5kΩ 1/16W	J

⚠	Symbol No.	Part No.	Part Name	Description	
	RESISTOR				
	R6136	NRSA63J-223X	MG R	22kΩ 1/16W	J
	R6137	NRSA63J-103X	MG R	10kΩ 1/16W	J
	R6138	NRSA63J-223X	MG R	22kΩ 1/16W	J
	R6139	NRSA63J-103X	MG R	10kΩ 1/16W	J
	R6140	NRSA63J-332X	MG R	3.3kΩ 1/16W	J
	R6142	NRSA63J-0R0X	MG R	0.0Ω 1/16W	J
	R6201	NRSA63J-0R0X	MG R	0.0Ω 1/16W	J
	R6202	NRSA63J-102X	MG R	1kΩ 1/16W	J
	R6203	NRSA63J-331X	MG R	330Ω 1/16W	J
	R6206	NRSA63J-472X	MG R	4.7kΩ 1/16W	J
	R6207	NRSA63J-102X	MG R	1kΩ 1/16W	J
	R6208	NRSA63J-102X	MG R	1kΩ 1/16W	J
	R6209	NRSA63J-222X	MG R	2.2kΩ 1/16W	J
	R6210	NRSA63J-153X	MG R	15kΩ 1/16W	J
	R6211	NRSA63J-102X	MG R	1kΩ 1/16W	J
	R6212	NRSA63J-103X	MG R	10kΩ 1/16W	J
	R6213	NRSA63J-102X	MG R	1kΩ 1/16W	J
	R6214	NRSA63J-332X	MG R	3.3kΩ 1/16W	J
	R6215	NRSA63J-152X	MG R	1.5kΩ 1/16W	J
	R6216	NRSA63J-222X	MG R	2.2kΩ 1/16W	J
	R6217	NRSA63J-333X	MG R	33kΩ 1/16W	J
	R6218	NRSA63J-103X	MG R	10kΩ 1/16W	J
	R6221	NRSA63J-221X	MG R	220Ω 1/16W	J
	R6222	NRSA63J-221X	MG R	220Ω 1/16W	J
	R6223	NRSA63J-101X	MG R	100Ω 1/16W	J
	R6224	NRSA63J-101X	MG R	100Ω 1/16W	J
	R6225	NRSA63J-182X	MG R	1.8kΩ 1/16W	J
	R6226	NRSA63J-222X	MG R	2.2kΩ 1/16W	J
	R6232	NRSA63J-122X	MG R	1.2kΩ 1/16W	J
	R6234	NRSA63J-222X	MG R	2.2kΩ 1/16W	J
	R6237	NRSA63J-682X	MG R	6.8kΩ 1/16W	J
	R6238	NRSA63J-105X	MG R	1MΩ 1/16W	J
	R6239	NRSA63J-105X	MG R	1MΩ 1/16W	J
	R6240	NRSA63J-0R0X	MG R	0.0Ω 1/16W	J
	R6241	NRSA63J-223X	MG R	22kΩ 1/16W	J
	R6242	NRSA63J-103X	MG R	10kΩ 1/16W	J
	R6244	NRSA63J-122X	MG R	1.2kΩ 1/16W	J
	R6246	NRSA63J-222X	MG R	2.2kΩ 1/16W	J
	R6249	NRSA63J-682X	MG R	6.8kΩ 1/16W	J
	R6250	NRSA63J-223X	MG R	22kΩ 1/16W	J
	R6251	NRSA63J-103X	MG R	10kΩ 1/16W	J
	R6254	NRSA63J-223X	MG R	22kΩ 1/16W	J
	R6255	NRSA63J-103X	MG R	10kΩ 1/16W	J
	R6256	NRSA63J-332X	MG R	3.3kΩ 1/16W	J
	R6257	NRSA63J-223X	MG R	22kΩ 1/16W	J
	R6258	NRSA63J-103X	MG R	10kΩ 1/16W	J
	R6259	NRSA63J-332X	MG R	3.3kΩ 1/16W	J
	R6260	NRSA63J-102X	MG R	1kΩ 1/16W	J
	R6261	NRSA63J-102X	MG R	1kΩ 1/16W	J
	R6262	NRSA63J-101X	MG R	100Ω 1/16W	J
	R6265	NRSA63J-103X	MG R	10kΩ 1/16W	J
	R6270	NRSA63J-0R0X	MG R	0.0Ω 1/16W	J
	R6271	NRSA63J-0R0X	MG R	0.0Ω 1/16W	J
	R6272	NRSA63J-0R0X	MG R	0.0Ω 1/16W	J
	R6401	NRSA63J-153X	MG R	15kΩ 1/16W	J
	R6402	NRSA63J-103X	MG R	10kΩ 1/16W	J
	R6403	NRSA63J-102X	MG R	1kΩ 1/16W	J
	R6404	NRSA63J-102X	MG R	1kΩ 1/16W	J
	R6405	NRSA63J-681X	MG R	680Ω 1/16W	J
	R6406	NRSA63J-391X	MG R	390Ω 1/16W	J
	R6501	NRSA63J-101X	MG R	100Ω 1/16W	J
	R6502	NRSA63J-101X	MG R	100Ω 1/16W	J
	R6503	NRSA63J-103X	MG R	10kΩ 1/16W	J
	R6504	NRSA63J-272X	MG R	2.7kΩ 1/16W	J
	R6505	NRSA63J-391X	MG R	390Ω 1/16W	J
	R6506	NRSA63J-222X	MG R	2.2kΩ 1/16W	J
	R6507	NRSA63J-182X	MG R	1.8kΩ 1/16W	J
	R6508	NRSA63J-101X	MG R	100Ω 1/16W	J
	R6509	NRSA63J-101X	MG R	100Ω 1/16W	J
	R6510	NRSA63J-472X	MG R	4.7kΩ 1/16W	J
	R6511	NRSA63J-0R0X	MG R	0.0Ω 1/16W	J
	R6514	NRSA63J-0R0X	MG R	0.0Ω 1/16W	J
	R6515	NRSA63J-101X	MG R	100Ω 1/16W	J
	R6516	NRSA63J-101X	MG R	100Ω 1/16W	J
	R6517	NRSA63J-101X	MG R	100Ω 1/16W	J
	R6518	NRSA63J-103X	MG R	10kΩ 1/16W	J

⚠	Symbol No.	Part No.	Part Name	Description
	RESISTOR			
	R6519	NRSA63J-103X	MG R	10kΩ 1/16W J
	R6520	NRSA63J-0R0X	MG R	0.0Ω 1/16W J
	R6521	NRSA63J-271X	MG R	270Ω 1/16W J
	R6522	NRSA63J-472X	MG R	4.7kΩ 1/16W J
	R6523	NRSA63J-332X	MG R	3.3kΩ 1/16W J
	R6524	NRSA63J-332X	MG R	3.3kΩ 1/16W J
	R6525	NRSA63J-332X	MG R	3.3kΩ 1/16W J
	R6528	NRSA63J-103X	MG R	10kΩ 1/16W J
	R6529	NRSA63J-472X	MG R	4.7kΩ 1/16W J
	R6531	NRSA63J-101X	MG R	100Ω 1/16W J
	R6532	NRSA63J-101X	MG R	100Ω 1/16W J
	R6533	NRSA63J-103X	MG R	10kΩ 1/16W J
	R6534	NRSA63J-223X	MG R	22kΩ 1/16W J
	R6535	NRSA63J-103X	MG R	10kΩ 1/16W J
	R6536	NRSA63J-822X	MG R	8.2kΩ 1/16W J
	R6537	NRSA63J-473X	MG R	47kΩ 1/16W J
	R6540	NRSA63J-102X	MG R	1kΩ 1/16W J
	R6541	NRSA63J-103X	MG R	10kΩ 1/16W J
	R6542	NRSA63J-472X	MG R	4.7kΩ 1/16W J
	R6543	NRSA63J-103X	MG R	10kΩ 1/16W J
	R6544	NRSA63J-682X	MG R	6.8kΩ 1/16W J
	R6545	NRSA63J-102X	MG R	1kΩ 1/16W J
	R6546	NRSA63J-224X	MG R	220kΩ 1/16W J
	R6547	NRSA63J-101X	MG R	100Ω 1/16W J
	R6548	NRSA63J-101X	MG R	100Ω 1/16W J
	R6549	NRSA63J-101X	MG R	100Ω 1/16W J
	R6550	NRSA63J-103X	MG R	10kΩ 1/16W J
	R6601	NRSA63J-223X	MG R	22kΩ 1/16W J
	R6602	NRSA63J-103X	MG R	10kΩ 1/16W J
	R6603	NRSA63J-472X	MG R	4.7kΩ 1/16W J
	R6604	NRSA63J-223X	MG R	22kΩ 1/16W J
	R6605	NRSA63J-103X	MG R	10kΩ 1/16W J
	R6606	NRSA63J-223X	MG R	22kΩ 1/16W J
	R6607	NRSA63J-103X	MG R	10kΩ 1/16W J
	R6608	NRSA63J-102X	MG R	1kΩ 1/16W J
	R6609	NRSA63J-0R0X	MG R	0.0Ω 1/16W J
	R6612	NRSA63J-562X	MG R	5.6kΩ 1/16W J
	R6613	NRSA63J-122X	MG R	1.2kΩ 1/16W J
	R6614	NRSA63J-223X	MG R	22kΩ 1/16W J
	R6615	NRSA63J-103X	MG R	10kΩ 1/16W J
	R6616	NRSA63J-102X	MG R	1kΩ 1/16W J
	R6617	NRSA63J-0R0X	MG R	0.0Ω 1/16W J
	R6619	NRSA63J-562X	MG R	5.6kΩ 1/16W J
	R6620	NRSA63J-122X	MG R	1.2kΩ 1/16W J
	R6621	NRSA63J-0R0X	MG R	0.0Ω 1/16W J
	R6622	NRSA63J-104X	MG R	100kΩ 1/16W J
	R6623	NRSA63J-0R0X	MG R	0.0Ω 1/16W J
	R6624	NRSA63J-104X	MG R	100kΩ 1/16W J
	R6625	NRSA63J-223X	MG R	22kΩ 1/16W J
	R6626	NRSA63J-103X	MG R	10kΩ 1/16W J
	R6627	NRSA63J-681X	MG R	680Ω 1/16W J
	R6628	NRSA63J-222X	MG R	2.2kΩ 1/16W J
	R6629	NRSA63J-152X	MG R	1.5kΩ 1/16W J
	R6630	NRSA63J-223X	MG R	22kΩ 1/16W J
	R6631	NRSA63J-103X	MG R	10kΩ 1/16W J
	R6632	NRSA63J-681X	MG R	680Ω 1/16W J
	R6633	NRSA63J-222X	MG R	2.2kΩ 1/16W J
	R6634	NRSA63J-152X	MG R	1.5kΩ 1/16W J
	R6635	NRSA63J-223X	MG R	22kΩ 1/16W J
	R6636	NRSA63J-103X	MG R	10kΩ 1/16W J
	R6637	NRSA63J-681X	MG R	680Ω 1/16W J
	R6638	NRSA63J-222X	MG R	2.2kΩ 1/16W J
	R6639	NRSA63J-152X	MG R	1.5kΩ 1/16W J
	R6640	NRSA63J-101X	MG R	100Ω 1/16W J
	R6641	NRSA63J-681X	MG R	680Ω 1/16W J
	R6642	NRSA63J-151X	MG R	150Ω 1/16W J
	R6643	NRSA63J-101X	MG R	100Ω 1/16W J
	R6644	NRSA63J-101X	MG R	100Ω 1/16W J
	R6645	NRSA63J-101X	MG R	100Ω 1/16W J
	R6646	NRSA63J-101X	MG R	100Ω 1/16W J
	R6647	NRSA63J-101X	MG R	100Ω 1/16W J
	R6648	NRSA63J-103X	MG R	10kΩ 1/16W J
	R6650	NRSA63J-0R0X	MG R	0.0Ω 1/16W J
	R6701	NRSA63J-103X	MG R	10kΩ 1/16W J
	R6702	NRSA63J-472X	MG R	4.7kΩ 1/16W J
	R6703	NRSA63J-472X	MG R	4.7kΩ 1/16W J

⚠	Symbol No.	Part No.	Part Name	Description
	RESISTOR			
	R6704	NRSA63J-103X	MG R	10kΩ 1/16W J
	R6705	NRSA63J-103X	MG R	10kΩ 1/16W J
	R6706	NRSA63J-103X	MG R	10kΩ 1/16W J
	R6707	NRSA63J-103X	MG R	10kΩ 1/16W J
	R6708	NRSA63J-682X	MG R	6.8kΩ 1/16W J
	R6709	NRSA63J-682X	MG R	6.8kΩ 1/16W J
	R6710	NRSA63J-221X	MG R	220Ω 1/16W J
	R6711	NRSA63J-472X	MG R	4.7kΩ 1/16W J
	R6712	NRSA63J-221X	MG R	220Ω 1/16W J
	R6713	NRSA63J-472X	MG R	4.7kΩ 1/16W J
	R6714	NRSA63J-472X	MG R	4.7kΩ 1/16W J
	R6715	NRSA63J-221X	MG R	220Ω 1/16W J
	R6716	NRSA63J-103X	MG R	10kΩ 1/16W J
	R6717	NRSA63J-103X	MG R	10kΩ 1/16W J
	R6718	NRSA63J-391X	MG R	390Ω 1/16W J
	R6719	NRSA63J-821X	MG R	820Ω 1/16W J
	R6720	NRSA63J-103X	MG R	10kΩ 1/16W J
	R6721	NRSA63J-103X	MG R	10kΩ 1/16W J
	R6722	NRSA63J-102X	MG R	1kΩ 1/16W J
	R6723	NRSA63J-103X	MG R	10kΩ 1/16W J
	R6724	NRSA63J-101X	MG R	100Ω 1/16W J
	R6725	NRSA63J-103X	MG R	10kΩ 1/16W J
	R6726	NRSA63J-103X	MG R	10kΩ 1/16W J
	R6727	NRSA63J-101X	MG R	100Ω 1/16W J
	R6728	NRSA63J-103X	MG R	10kΩ 1/16W J
	R6729	NRSA63J-101X	MG R	100Ω 1/16W J
	R6730	NRSA63J-103X	MG R	10kΩ 1/16W J
	R6731	NRSA63J-101X	MG R	100Ω 1/16W J
	R6732	NRSA63J-103X	MG R	10kΩ 1/16W J
	R6733	NRSA63J-101X	MG R	100Ω 1/16W J
	R6734	NRSA63J-103X	MG R	10kΩ 1/16W J
	R6735	NRSA63J-101X	MG R	100Ω 1/16W J
	R6736	NRSA63J-103X	MG R	10kΩ 1/16W J
	R6737	NRSA63J-101X	MG R	100Ω 1/16W J
	R6738	NRSA63J-472X	MG R	4.7kΩ 1/16W J
	R6739	NRSA63J-221X	MG R	220Ω 1/16W J
	R6740	NRSA63J-472X	MG R	4.7kΩ 1/16W J
	R6741	NRSA63J-221X	MG R	220Ω 1/16W J
	R6742	NRSA63J-103X	MG R	10kΩ 1/16W J
	R6743	NRSA63J-101X	MG R	100Ω 1/16W J
	R6744	NRSA63J-103X	MG R	10kΩ 1/16W J
	R6745	NRSA63J-101X	MG R	100Ω 1/16W J
	R6746	NRSA63J-101X	MG R	100Ω 1/16W J
	R6747	NRSA63J-101X	MG R	100Ω 1/16W J
	R6748	NRSA63J-103X	MG R	10kΩ 1/16W J
	R6749	NRSA63J-103X	MG R	10kΩ 1/16W J
	R6750	NRSA63J-103X	MG R	10kΩ 1/16W J
	R6751	NRSA63J-103X	MG R	10kΩ 1/16W J
	R6752	NRSA63J-102X	MG R	1kΩ 1/16W J
	R6753	NRSA63J-103X	MG R	10kΩ 1/16W J
	R6754	NRSA63J-103X	MG R	10kΩ 1/16W J
	R6755	NRSA63J-103X	MG R	10kΩ 1/16W J
	R6756	NRSA63J-103X	MG R	10kΩ 1/16W J
	R6757	NRSA63J-103X	MG R	10kΩ 1/16W J
	R6758	NRSA63J-103X	MG R	10kΩ 1/16W J
	R6759	NRSA63J-103X	MG R	10kΩ 1/16W J
	R6760	NRSA63J-103X	MG R	10kΩ 1/16W J
	R6761	NRSA63J-103X	MG R	10kΩ 1/16W J
	R6762	NRSA63J-103X	MG R	10kΩ 1/16W J
	R6763	NRSA63J-681X	MG R	680Ω 1/16W J
	R6764	NRSA63J-681X	MG R	680Ω 1/16W J
	R6765	NRSA63J-103X	MG R	10kΩ 1/16W J
	R6766	NRSA63J-472X	MG R	4.7kΩ 1/16W J
	R6767	NRSA63J-331X	MG R	330Ω 1/16W J
	R6768	NRSA63J-103X	MG R	10kΩ 1/16W J
	R6769	NRSA63J-472X	MG R	4.7kΩ 1/16W J
	R6770	NRSA63J-271X	MG R	270Ω 1/16W J
	R6771	NRSA63J-102X	MG R	1kΩ 1/16W J
	R6772	NRSA63J-103X	MG R	10kΩ 1/16W J
	R6773	NRSA63J-103X	MG R	10kΩ 1/16W J
	R6774	NRSA63J-103X	MG R	10kΩ 1/16W J
	R6775	NRSA63J-681X	MG R	680Ω 1/16W J
	R6776	NRSA63J-681X	MG R	680Ω 1/16W J
	R6777	NRSA63J-681X	MG R	680Ω 1/16W J
	R6778	NRSA63J-103X	MG R	10kΩ 1/16W J
	R6779	NRSA63J-103X	MG R	10kΩ 1/16W J

⚠	Symbol No.	Part No.	Part Name	Description
	RESISTOR			
	R6780	NRSA63J-681X	MG R	680Ω 1/16W J
	R6781	NRSA63J-681X	MG R	680Ω 1/16W J
	R6782	NRSA63J-681X	MG R	680Ω 1/16W J
	R6784	NRSA63J-103X	MG R	10kΩ 1/16W J
	R6785	NRSA63J-101X	MG R	100Ω 1/16W J
	R6788	NRSA63J-103X	MG R	10kΩ 1/16W J
	R6789	NRSA63J-0ROX	MG R	0.0Ω 1/16W J
	R6790	NCF31CZ-104X	C CAP.	0.1μF 16V Z
	R6791	NRSA63J-101X	MG R	100Ω 1/16W J
	R6792	NRSA63J-101X	MG R	100Ω 1/16W J
	R6793	NRSA63J-101X	MG R	100Ω 1/16W J
	R6794	NRSA63J-101X	MG R	100Ω 1/16W J
	R6796	NRSA63J-103X	MG R	10kΩ 1/16W J
	R6801	NRSA63J-101X	MG R	100Ω 1/16W J
	R6802	NRSA63J-472X	MG R	4.7kΩ 1/16W J
	R6803	NRSA63J-101X	MG R	100Ω 1/16W J
	R6804	NRSA63J-472X	MG R	4.7kΩ 1/16W J
	R6805	NRSA63J-102X	MG R	1kΩ 1/16W J
	R6806	NRSA63J-222X	MG R	2.2kΩ 1/16W J
	R6807	NRSA63J-222X	MG R	2.2kΩ 1/16W J
	R6808	NRSA63J-153X	MG R	15kΩ 1/16W J
	R6809	NRSA63J-332X	MG R	3.3kΩ 1/16W J
	R6810	NRSA63J-102X	MG R	1kΩ 1/16W J
	R6811	NRSA63J-223X	MG R	22kΩ 1/16W J
	R6812	NRVA02D-102X	MF R	1kΩ 1/10W D
	R6814	NRVA02D-682X	MF R	6.8kΩ 1/10W D
	R6815	NRSA63J-104X	MG R	100kΩ 1/16W J
	R6816	NRSA63J-222X	MG R	2.2kΩ 1/16W J
	R6820	NRVA02D-102X	MF R	1kΩ 1/10W D
	R6822	NRVA02D-472X	MF R	4.7kΩ 1/10W D
	R6824	NRSA63J-472X	MG R	4.7kΩ 1/16W J
	R6826	NRSA63J-153X	MG R	15kΩ 1/16W J
	R6827	NRSA63J-103X	MG R	10kΩ 1/16W J
	R6828	NRVA02D-152X	MF R	1.5kΩ 1/10W D
	R6830	NRVA02D-152X	MF R	1.5kΩ 1/10W D
	R6833	NRSA63J-222X	MG R	2.2kΩ 1/16W J
	R6835	NRSA63J-681X	MG R	680Ω 1/16W J
	R6836	NRSA63J-222X	MG R	2.2kΩ 1/16W J
	R6837	NRSA63J-102X	MG R	1kΩ 1/16W J
	R6842	NRSA63J-103X	MG R	10kΩ 1/16W J
	CAPACITOR			
	C6001	QETN1CM-107Z	E CAP.	100μF 16V M
	C6002	NCF31CZ-104X	C CAP.	0.1μF 16V Z
	C6003	QETN1HM-475Z	E CAP.	4.7μF 50V M
	C6004	NCF31CZ-104X	C CAP.	0.1μF 16V Z
	C6005	QETN1HM-475Z	E CAP.	4.7μF 50V M
	C6006	NCF31CZ-104X	C CAP.	0.1μF 16V Z
	C6007	QETN1HM-475Z	E CAP.	4.7μF 50V M
	C6008	NCF31CZ-104X	C CAP.	0.1μF 16V Z
	C6009	QETN1HM-225Z	E CAP.	2.2μF 50V M
	C6010	QETN1HM-225Z	E CAP.	2.2μF 50V M
	C6011	NCB31CK-104X	C CAP.	0.1μF 16V K
	C6012	NCB31HK-103X	C CAP.	0.01μF 50V K
	C6013	NCB31HK-103X	C CAP.	0.01μF 50V K
	C6014	NCB31CK-104X	C CAP.	0.1μF 16V K
	C6015	NDC31HJ-151X	C CAP.	150pF 50V J
	C6016	NCB31CK-104X	C CAP.	0.1μF 16V K
	C6017	NCB31HK-103X	C CAP.	0.01μF 50V K
	C6018	NRSA63J-0ROX	MG R	0.0Ω 1/16W J
	C6019	NCB31HK-103X	C CAP.	0.01μF 50V K
	C6020	NCB31HK-103X	C CAP.	0.01μF 50V K
	C6021	NCB31HK-103X	C CAP.	0.01μF 50V K
	C6022	NCB31EK-473X	C CAP.	0.047μF 25V K
	C6023	NCB31HK-103X	C CAP.	0.01μF 50V K
	C6024	QETN1CM-107Z	E CAP.	100μF 16V M
	C6025	NCF31CZ-104X	C CAP.	0.1μF 16V Z
	C6026	QETN1HM-226Z	E CAP.	22μF 50V M
	C6027	NCB31CK-104X	C CAP.	0.1μF 16V K
	C6028	NCB31HK-103X	C CAP.	0.01μF 50V K
	C6029	NDC31HJ-151X	C CAP.	150pF 50V J
	C6030	NCB31HK-103X	C CAP.	0.01μF 50V K
	C6031	NCB31HK-103X	C CAP.	0.01μF 50V K
	C6032	NDC31HJ-151X	C CAP.	150pF 50V J

⚠	Symbol No.	Part No.	Part Name	Description
	CAPACITOR			
	C6033	NDC31HJ-181X	C CAP.	180pF 50V J
	C6034	NDC31HJ-181X	C CAP.	180pF 50V J
	C6035	NDC31HJ-181X	C CAP.	180pF 50V J
	C6038	QETN1HM-225Z	E CAP.	2.2μF 50V M
	C6101	QETN1CM-107Z	E CAP.	100μF 16V M
	C6102	NCF31CZ-104X	C CAP.	0.1μF 16V Z
	C6103	NCB31HK-103X	C CAP.	0.01μF 50V K
	C6104	NCB31HK-103X	C CAP.	0.01μF 50V K
	C6105	QENC1HM-105Z	E CAP.	1μF 50V M
	C6106	NCB31HK-103X	C CAP.	0.01μF 50V K
	C6107	QETN1CM-107Z	E CAP.	100μF 16V M
	C6108	NCF31CZ-104X	C CAP.	0.1μF 16V Z
	C6109	QETN1CM-107Z	E CAP.	100μF 16V M
	C6110	NCF31CZ-104X	C CAP.	0.1μF 16V Z
	C6111	NCB31HK-103X	C CAP.	0.01μF 50V K
	C6112	NCB31HK-103X	C CAP.	0.01μF 50V K
	C6113	NCF31CZ-104X	C CAP.	0.1μF 16V Z
	C6114	QETN1CM-107Z	E CAP.	100μF 16V M
	C6115	NDC31HJ-181X	C CAP.	180pF 50V J
	C6116	NCB31HK-103X	C CAP.	0.01μF 50V K
	C6117	NCB31HK-103X	C CAP.	0.01μF 50V K
	C6118	QETN1CM-107Z	E CAP.	100μF 16V M
	C6119	QETN1CM-107Z	E CAP.	100μF 16V M
	C6120	NCF31CZ-104X	C CAP.	0.1μF 16V Z
	C6122	NDC31HJ-220X	C CAP.	22pF 50V J
	C6123	NDC31HJ-5R0X	C CAP.	5.0pF 50V J
	C6125	QETN1HM-106Z	E CAP.	10μF 50V M
	C6127	NCB31AK-474X	C CAP.	0.47μF 10V K
	C6129	NCB31AK-474X	C CAP.	0.47μF 10V K
	C6130	QENC1CM-336Z	E CAP.	33μF 16V M
	C6136	NDC31HJ-181X	C CAP.	180pF 50V J
	C6137	NDC31HJ-181X	C CAP.	180pF 50V J
	C6141	QENC1CM-106Z	E CAP.	10μF 16V M
	C6142	NCF31CZ-104X	C CAP.	0.1μF 16V Z
	C6202	NDC31HJ-270X	C CAP.	27pF 50V J
	C6206	NCB31CK-104X	C CAP.	0.1μF 16V K
	C6207	NCB31HK-222X	C CAP.	2200pF 50V K
	C6208	QFV71HJ-224Z	MF CAP.	0.22μF 50V J
	C6209	NDC31HJ-120X	C CAP.	12pF 50V J
	C6210	NDC31HJ-470X	C CAP.	47pF 50V J
	C6211	NDC31HJ-470X	C CAP.	47pF 50V J
	C6212	NDC31HJ-120X	C CAP.	12pF 50V J
	C6213	NCB31CK-104X	C CAP.	0.1μF 16V K
	C6214	NCB31CK-104X	C CAP.	0.1μF 16V K
	C6215	NCF31CZ-104X	C CAP.	0.1μF 16V Z
	C6216	QETN1CM-107Z	E CAP.	100μF 16V M
	C6217	NCB31CK-104X	C CAP.	0.1μF 16V K
	C6221	NCB31CK-104X	C CAP.	0.1μF 16V K
	C6222	NDC31HJ-101X	C CAP.	100pF 50V J
	C6223	QENC1HM-474Z	E CAP.	0.47μF 50V M
	C6224	NCF31CZ-104X	C CAP.	0.1μF 16V Z
	C6225	QETN1CM-107Z	E CAP.	100μF 16V M
	C6226	NDC31HJ-101X	C CAP.	100pF 50V J
	C6227	QENC1HM-474Z	E CAP.	0.47μF 50V M
	C6228	NCB31CK-104X	C CAP.	0.1μF 16V K
	C6229	NCB31CK-104X	C CAP.	0.1μF 16V K
	C6230	NCB31CK-104X	C CAP.	0.1μF 16V K
	C6231	NCB31CK-104X	C CAP.	0.1μF 16V K
	C6232	NCB31CK-104X	C CAP.	0.1μF 16V K
	C6233	QETN1HM-105Z	E CAP.	1μF 50V M
	C6234	QETN1HM-105Z	E CAP.	1μF 50V M
	C6235	QETN1HM-105Z	E CAP.	1μF 50V M
	C6238	QENC1CM-336Z	E CAP.	33μF 16V M
	C6239	QENC1CM-336Z	E CAP.	33μF 16V M
	C6240	NCB31CK-104X	C CAP.	0.1μF 16V K
	C6241	NCB31CK-104X	C CAP.	0.1μF 16V K
	C6242	NCF31CZ-104X	C CAP.	0.1μF 16V Z
	C6243	QENC1CM-106Z	E CAP.	10μF 16V M
	C6244	NCB31CK-104X	C CAP.	0.1μF 16V K
	C6245	NCB31CK-104X	C CAP.	0.1μF 16V K
	C6249	NDC31HJ-181X	C CAP.	180pF 50V J
	C6401	NDC31HJ-101X	C CAP.	100pF 50V J
	C6403	QETN1EM-476Z	E CAP.	47μF 25V M
	C6501	QETN1CM-107Z	E CAP.	100μF 16V M
	C6502	NCF31CZ-104X	C CAP.	0.1μF 16V Z
	C6503	NCB31HK-223X	C CAP.	0.022μF 50V K
	C6504	QETN1HM-106Z	E CAP.	10μF 50V M

CAPACITOR

⚠	Symbol No.	Part No.	Part Name	Description		
	C6505	QETN1CM-477Z	E CAP.	470µF	16V	M
	C6506	NCF31CZ-104X	C CAP.	0.1µF	16V	Z
	C6507	NCB31HK-103X	C CAP.	0.01µF	50V	K
	C6508	NCB31CK-104X	C CAP.	0.1µF	16V	K
	C6509	NCB31CK-104X	C CAP.	0.1µF	16V	K
	C6510	NCB31CK-104X	C CAP.	0.1µF	16V	K
	C6511	NCB31CK-104X	C CAP.	0.1µF	16V	K
	C6512	NCB31CK-104X	C CAP.	0.1µF	16V	K
	C6513	NCB31CK-104X	C CAP.	0.1µF	16V	K
	C6514	NCB31CK-104X	C CAP.	0.1µF	16V	K
	C6515	NCB31CK-104X	C CAP.	0.1µF	16V	K
	C6516	NCF31CZ-104X	C CAP.	0.1µF	16V	Z
	C6517	QETN1CM-107Z	E CAP.	100µF	16V	M
	C6518	QETN1HM-474Z	E CAP.	0.47µF	50V	M
	C6519	NCF31CZ-104X	C CAP.	0.1µF	16V	Z
	C6520	QETN1CM-107Z	E CAP.	100µF	16V	M
	C6521	QETN1HM-225Z	E CAP.	2.2µF	50V	M
	C6522	NCB31CK-104X	C CAP.	0.1µF	16V	K
	C6523	NCB31CK-104X	C CAP.	0.1µF	16V	K
	C6524	QETN1HM-226Z	E CAP.	22µF	50V	M
	C6525	QETN1EM-476Z	E CAP.	47µF	25V	M
	C6526	QETN1EM-476Z	E CAP.	47µF	25V	M
	C6527	QETN1HM-225Z	E CAP.	2.2µF	50V	M
	C6529	QETN1HM-225Z	E CAP.	2.2µF	50V	M
	C6530	NCB31HK-222X	C CAP.	2200pF	50V	K
	C6534	QETN1HM-106Z	E CAP.	10µF	50V	M
	C6601	QETN1CM-107Z	E CAP.	100µF	16V	M
	C6602	NCF31CZ-104X	C CAP.	0.1µF	16V	Z
	C6603	QENC1CM-336Z	E CAP.	33µF	16V	M
	C6604	QENC1CM-336Z	E CAP.	33µF	16V	M
	C6605	QENC1CM-336Z	E CAP.	33µF	16V	M
	C6702	NDC31HJ-560X	C CAP.	56pF	50V	J
	C6703	NDC31HJ-680X	C CAP.	68pF	50V	J
	C6704	QETN1CM-107Z	E CAP.	100µF	16V	M
	C6705	NCF31CZ-104X	C CAP.	0.1µF	16V	Z
	C6706	QETN1CM-227Z	E CAP.	220µF	16V	M
	C6707	NCF31CZ-104X	C CAP.	0.1µF	16V	Z
	C6708	NCF31CZ-104X	C CAP.	0.1µF	16V	Z
	C6709	QETN1EM-227Z	E CAP.	220µF	25V	M
	C6715	QETN1HM-225Z	E CAP.	2.2µF	50V	M
	C6717	NCF31CZ-104X	C CAP.	0.1µF	16V	Z
	C6718	NCF31CZ-104X	C CAP.	0.1µF	16V	Z
	C6719	NCF31CZ-104X	C CAP.	0.1µF	16V	Z
	C6720	NCF31CZ-104X	C CAP.	0.1µF	16V	Z
	C6801	NDC31HJ-681X	C CAP.	680pF	50V	J
	C6802	NDC31HJ-102X	C CAP.	1000pF	50V	J
	C6803	NDC31HJ-681X	C CAP.	680pF	50V	J
	C6804	NDC31HJ-102X	C CAP.	1000pF	50V	J
	C6805	NCF31CZ-104X	C CAP.	0.1µF	16V	Z
	C6806	QETN1CM-107Z	E CAP.	100µF	16V	M
	C6809	NDC31HJ-331X	C CAP.	330pF	50V	J
	C6810	NDC31HJ-102X	C CAP.	1000pF	50V	J
	C6811	NCF31CZ-104X	C CAP.	0.1µF	16V	Z
	C6812	NCF31CZ-104X	C CAP.	0.1µF	16V	Z
	C6813	NCF31CZ-104X	C CAP.	0.1µF	16V	Z
	C6814	NDC31HJ-221X	C CAP.	220pF	50V	J
	C6901	NCF31CZ-104X	C CAP.	0.1µF	16V	Z
	C6902	QETN1CM-107Z	E CAP.	100µF	16V	M
	C6903	QETN1CM-107Z	E CAP.	100µF	16V	M
	C6904	NCF31CZ-104X	C CAP.	0.1µF	16V	Z
	C6905	NCF31CZ-104X	C CAP.	0.1µF	16V	Z
	C6906	QETN1CM-107Z	E CAP.	100µF	16V	M
	C6909	NCF31CZ-104X	C CAP.	0.1µF	16V	Z
	C6910	QETN1CM-107Z	E CAP.	100µF	16V	M
	C6911	QETN1CM-107Z	E CAP.	100µF	16V	M
	C6912	NCF31CZ-104X	C CAP.	0.1µF	16V	Z

COIL

⚠	Symbol No.	Part No.	Part Name	Description	
	L6101	QQL244K-100Z	COIL	10µH	K
	L6102	QQL244K-100Z	COIL	10µH	K
	L6103	QQL244K-100Z	COIL	10µH	K
	L6105	QQL244K-4R7Z	COIL	4.7µH	K
	L6106	QQL244K-330Z	COIL	33µH	K
	L6701	QQL244K-4R7Z	COIL	4.7µH	K
	L6702	QQL244K-8R2Z	COIL	8.2µH	K

DIODE

⚠	Symbol No.	Part No.	Part Name	Description
	D6001	MA111-X	SI.DIODE	
	D6002	MA111-X	SI.DIODE	
	D6003	MA111-X	SI.DIODE	
	D6004	MA111-X	SI.DIODE	
	D6006	MA111-X	SI.DIODE	
	D6007	MA111-X	SI.DIODE	
	D6008	MA111-X	SI.DIODE	
	D6010	MA111-X	SI.DIODE	
	D6011	MA111-X	SI.DIODE	
	D6012	MA111-X	SI.DIODE	
	D6013	MA111-X	SI.DIODE	
	D6015	MA111-X	SI.DIODE	
	D6016	MA111-X	SI.DIODE	
	D6017	MA111-X	SI.DIODE	
	D6018	MA3091/M/-X	ZENER DIODE	
	D6023	MA111-X	SI.DIODE	
	D6024	MA111-X	SI.DIODE	
	D6025	MA111-X	SI.DIODE	
	D6026	MA111-X	SI.DIODE	
	D6027	MA111-X	SI.DIODE	
	D6028	MA111-X	SI.DIODE	
	D6029	MA111-X	SI.DIODE	
	D6030	MA111-X	SI.DIODE	
	D6031	MA111-X	SI.DIODE	
	D6032	MA111-X	SI.DIODE	
	D6033	MA3091/M/-X	ZENER DIODE	
	D6401	MA111-X	SI.DIODE	
	D6503	MA111-X	SI.DIODE	
	D6504	MA111-X	SI.DIODE	
	D6505	MA111-X	SI.DIODE	
	D6506	MA111-X	SI.DIODE	
	D6507	MA111-X	SI.DIODE	
	D6508	MA111-X	SI.DIODE	
	D6509	MA111-X	SI.DIODE	
	D6510	MA111-X	SI.DIODE	
	D6511	MA111-X	SI.DIODE	
	D6512	MA111-X	SI.DIODE	
	D6513	MA111-X	SI.DIODE	
	D6514	MA111-X	SI.DIODE	
	D6515	MA111-X	SI.DIODE	
	D6516	MA111-X	SI.DIODE	
	D6517	MA111-X	SI.DIODE	
	D6518	MA111-X	SI.DIODE	
	D6519	MA111-X	SI.DIODE	
	D6520	MA3068/M/-X	ZENER DIODE	
	D6702	MA111-X	SI.DIODE	
	D6703	MA111-X	SI.DIODE	
	D6704	MA111-X	SI.DIODE	
	D6705	MA3051/M/-X	ZENER DIODE	
	D6706	MA111-X	SI.DIODE	
	D6707	MA111-X	SI.DIODE	
	D6708	MA111-X	SI.DIODE	
	D6709	MA3120/M/-X	ZENER DIODE	
	D6711	MA111-X	SI.DIODE	
	D6801	MA111-X	SI.DIODE	
	D6802	MA111-X	SI.DIODE	
	D6803	MA111-X	SI.DIODE	
	D6804	MA111-X	SI.DIODE	

TRANSISTOR

⚠	Symbol No.	Part No.	Part Name	Description
	Q6001	2SC2412K/QR/-X	SI.TRANSISTOR	
	Q6002	2SC2412K/QR/-X	SI.TRANSISTOR	
	Q6003	2SC2412K/QR/-X	SI.TRANSISTOR	
	Q6101	2SC2412K/QR/-X	SI.TRANSISTOR	
	Q6102	2SC2412K/QR/-X	SI.TRANSISTOR	
	Q6103	2SC2412K/QR/-X	SI.TRANSISTOR	
	Q6104	2SC2412K/QR/-X	SI.TRANSISTOR	
	Q6105	2SC2412K/QR/-X	SI.TRANSISTOR	
	Q6106	2SC2412K/QR/-X	SI.TRANSISTOR	
	Q6107	2SC2412K/QR/-X	SI.TRANSISTOR	
	Q6108	DTC124EKA-X	DIGI.TRANSISTOR	
	Q6109	2SC2412K/QR/-X	SI.TRANSISTOR	
	Q6110	2SC2412K/QR/-X	SI.TRANSISTOR	
	Q6111	2SC2412K/QR/-X	SI.TRANSISTOR	
	Q6201	2SC2412K/QR/-X	SI.TRANSISTOR	
	Q6202	2SC2412K/QR/-X	SI.TRANSISTOR	
	Q6203	2SC2412K/QR/-X	SI.TRANSISTOR	
	Q6204	2SC2412K/QR/-X	SI.TRANSISTOR	
	Q6205	2SC2412K/QR/-X	SI.TRANSISTOR	
	Q6206	2SC2412K/QR/-X	SI.TRANSISTOR	
	Q6207	2SC2412K/QR/-X	SI.TRANSISTOR	

⚠	Symbol No.	Part No.	Part Name	Description
	TRANSISTOR			
	Q6208	2SC2412K/QR/-X	SI.TRANSISTOR	
	Q6210	2SC2412K/QR/-X	SI.TRANSISTOR	
	Q6211	2SC2412K/QR/-X	SI.TRANSISTOR	
	Q6213	2SC2412K/QR/-X	SI.TRANSISTOR	
	Q6216	2SC2412K/QR/-X	SI.TRANSISTOR	
	Q6217	2SC2412K/QR/-X	SI.TRANSISTOR	
	Q6401	2SC2412K/QR/-X	SI.TRANSISTOR	
	Q6402	2SA965/OY/-T	SI.TRANSISTOR	
	Q6501	DTC124EKA-X	DIGI.TRANSISTOR	
	Q6502	2SC2412K/QR/-X	SI.TRANSISTOR	
	Q6503	2SA1037AK/QR/-X	SI.TRANSISTOR	
	Q6504	2SA1037AK/QR/-X	SI.TRANSISTOR	
	Q6505	2SA1037AK/QR/-X	SI.TRANSISTOR	
	Q6507	2SA1037AK/QR/-X	SI.TRANSISTOR	
	Q6508	DTC124EKA-X	DIGI.TRANSISTOR	
	Q6509	2SC2412K/QR/-X	SI.TRANSISTOR	
	Q6510	DTC124EKA-X	DIGI.TRANSISTOR	
	Q6511	2SC2412K/QR/-X	SI.TRANSISTOR	
	Q6512	DTC124EKA-X	DIGI.TRANSISTOR	
	Q6513	DTC124EKA-X	DIGI.TRANSISTOR	
	Q6514	DTC124EKA-X	DIGI.TRANSISTOR	
	Q6515	2SC2412K/QR/-X	SI.TRANSISTOR	
	Q6601	2SC2412K/QR/-X	SI.TRANSISTOR	
	Q6603	2SC2412K/QR/-X	SI.TRANSISTOR	
	Q6605	2SC2412K/QR/-X	SI.TRANSISTOR	
	Q6606	2SC2412K/QR/-X	SI.TRANSISTOR	
	Q6607	2SC2412K/QR/-X	SI.TRANSISTOR	
	Q6608	2SC2412K/QR/-X	SI.TRANSISTOR	
	Q6609	2SC2412K/QR/-X	SI.TRANSISTOR	
	Q6610	2SC2412K/QR/-X	SI.TRANSISTOR	
	Q6611	2SC2412K/QR/-X	SI.TRANSISTOR	
	Q6612	DTC124EKA-X	DIGI.TRANSISTOR	
	Q6701	DTA124EKA-X	DIGI.TRANSISTOR	
	Q6702	DTA124EKA-X	DIGI.TRANSISTOR	
	Q6703	DTA124EKA-X	DIGI.TRANSISTOR	
	Q6704	DTA124EKA-X	DIGI.TRANSISTOR	
	Q6705	DTA124EKA-X	DIGI.TRANSISTOR	
	Q6706	DTA124EKA-X	DIGI.TRANSISTOR	
	Q6707	DTA124EKA-X	DIGI.TRANSISTOR	
	Q6708	DTA124EKA-X	DIGI.TRANSISTOR	
	Q6710	DTA124EKA-X	DIGI.TRANSISTOR	
	Q6711	DTA124EKA-X	DIGI.TRANSISTOR	
	Q6713	DTC124EKA-X	DIGI.TRANSISTOR	
	Q6715	DTC124EKA-X	DIGI.TRANSISTOR	
	Q6716	2SC2412K/QR/-X	SI.TRANSISTOR	
	Q6717	2SC2412K/QR/-X	SI.TRANSISTOR	
	Q6718	2SC2412K/QR/-X	SI.TRANSISTOR	
	Q6719	DTC124EKA-X	DIGI.TRANSISTOR	
	Q6720	2SC2412K/QR/-X	SI.TRANSISTOR	
	Q6801	2SC2412K/QR/-X	SI.TRANSISTOR	
	Q6802	2SC2412K/QR/-X	SI.TRANSISTOR	
	Q6803	2SC2412K/QR/-X	SI.TRANSISTOR	
	Q6804	2SA1037AK/QR/-X	SI.TRANSISTOR	
	Q6805	2SC2412K/QR/-X	SI.TRANSISTOR	
	Q6807	DTC124EKA-X	DIGI.TRANSISTOR	
	Q6808	2SC2412K/QR/-X	SI.TRANSISTOR	
	Q6809	2SC2412K/QR/-X	SI.TRANSISTOR	
	Q6811	2SC2412K/QR/-X	SI.TRANSISTOR	
	IC			
	IC6001	JLC1562BF-X	I.C.	
	IC6002	MM1311BD	I.C.	
	IC6101	TC90A49F-X	I.C.	
	IC6102	NJM2234M-XE	I.C.	
	IC6201	TA8772AN	I.C.	
	IC6501	TA1276AN	I.C.	
	IC6601	TC4053BF/N/-XE	I.C.	
	IC6602	TC4053BF/N/-XE	I.C.	
	IC6701	M37207MC-316SP	I.C.	
	IC6702	AT24C08-H1750C	I.C.	(SERVICE)
	IC6703	L78LR05E-MA	I.C.	
	IC6801	TC4538BF/N/-XE	I.C.	
	IC6802	TC4538BF/N/-XE	I.C.	
	IC6803	TC4538BF/N/-XE	I.C.	
	IC6901	BA17809T	I.C.	
	IC6903	BA17805T	I.C.	

⚠	Symbol No.	Part No.	Part Name	Description
	OTHERS			
		QQR0942-001	CORE FILTER	
	CN6001	QGB1505K1-25	B TO B CONNECTOR	
	CN6002	QGB1505K1-25	B TO B CONNECTOR	
	CN6005	QGB1505J1-25	B TO B CONNECTOR	
⚠	CP6901	ICP-N10-Y	I.C.PROTECT	
⚠	CP6903	ICP-N10-Y	I.C.PROTECT	
	FL6101	CE42697-001	L P F	
	FL6102	CE42697-001	L P F	
	FL6201	CE42697-001	L P F	
	J6001	QNZ0561-001	D CONNECT	
	J6002	CEMB021-002	BNC CONNECTOR	
	J6003	CEMB021-002	BNC CONNECTOR	
	J6004	QMD2B04-001	MINI CONN	
	J6005	QMD2B04-001	MINI CONN	
	J6006	CEMN036-005	PIN JACK	
	K6001	CE42681-001Y	CHIP BEAD	
	K6002	CE42681-001Y	CHIP BEAD	
	K6003	NQR0357-002X	FERRITE BEADS	
	K6004	NQR0357-002X	FERRITE BEADS	
	K6101	CE42681-001Y	CHIP BEAD	
	K6102	CE42681-001Y	CHIP BEAD	
	K6103	NQR0357-002X	FERRITE BEADS	
	K6201	CE42681-001Y	CHIP BEAD	
	K6202	CE42681-001Y	CHIP BEAD	
	W6252	QRE141J-222Y	C R	2.2kΩ 1/4W J
	W6267	1SS133-T2	SI.DIODE	
	X6201	CE40749-001Z	X TAL	
	X6202	CE40668-001Z	CRYSTAL	
	X6503	CSB503F30-T2	C RESONAT	
	X6701	CST8.00MTW	C RESONAT	
		QQR0942-001	CORE FILT	

TALLY P.W. BOARD ASS'Y (FX-7019A-H2)

⚠	Symbol No.	Part No.	Part Name	Description
	RESISTOR			
	R7001	NRSA63J-472X	MG R	4.7kΩ 1/16W J
	R7002	NRSA63J-472X	MG R	4.7kΩ 1/16W J
	R7003	NRSA63J-472X	MG R	4.7kΩ 1/16W J
	R7004	NRSA63J-472X	MG R	4.7kΩ 1/16W J
	R7005	NRSA63J-472X	MG R	4.7kΩ 1/16W J
	R7006	NRSA63J-472X	MG R	4.7kΩ 1/16W J
	R7007	NRSA63J-472X	MG R	4.7kΩ 1/16W J
	R7008	NRSA63J-472X	MG R	4.7kΩ 1/16W J
	DIODE			
	D7001	SEL5620C	LED	
	D7002	SEL5620C	LED	
	D7003	SEL5620C	LED	
	D7004	SEL5620C	LED	

SLOT P.W. BOARD ASS'Y (FX-8022A-H2)

⚠	Symbol No.	Part No.	Part Name	Description
	RESISTOR			
	R8001	NRSA63J-563X	MG R	56kΩ 1/16W J
	R8002	NRSA63J-683X	MG R	68kΩ 1/16W J
	R8003	NRSA63J-102X	MG R	1kΩ 1/16W J
	R8004	NRSA63J-684X	MG R	680kΩ 1/16W J
	R8005	NRSA63J-332X	MG R	3.3kΩ 1/16W J
	R8006	NRSA63J-181X	MG R	180Ω 1/16W J
	R8007	NRSA63J-103X	MG R	10kΩ 1/16W J
	R8008	NRSA63J-273X	MG R	27kΩ 1/16W J
	R8009	NRSA63J-681X	MG R	680Ω 1/16W J
	R8010	NRSA63J-681X	MG R	680Ω 1/16W J
	R8011	NRSA63J-331X	MG R	330Ω 1/16W J
	R8012	NRSA63J-OROX	MG R	0.0Ω 1/16W J
	R8013	NRSA63J-562X	MG R	5.6kΩ 1/16W J
	R8014	NRSA63J-472X	MG R	4.7kΩ 1/16W J
	R8015	NRSA63J-473X	MG R	47kΩ 1/16W J
	R8016	NRSA63J-153X	MG R	15kΩ 1/16W J
	R8017	NRSA63J-471X	MG R	470Ω 1/16W J
	R8018	NRSA63J-OROX	MG R	0.0Ω 1/16W J
	R8019	NRSA63J-OROX	MG R	0.0Ω 1/16W J
	R8020	NRSA63J-562X	MG R	5.6kΩ 1/16W J
	R8021	NRSA63J-472X	MG R	4.7kΩ 1/16W J
	R8022	NRSA63J-154X	MG R	150kΩ 1/16W J
	R8023	NRSA63J-154X	MG R	150kΩ 1/16W J
	R8024	NRSA63J-101X	MG R	100Ω 1/16W J
	R8025	NRSA63J-102X	MG R	1kΩ 1/16W J
	R8026	NRSA63J-101X	MG R	100Ω 1/16W J
	R8027	NRSA63J-332X	MG R	3.3kΩ 1/16W J
	R8028	NRSA63J-332X	MG R	3.3kΩ 1/16W J
	R8029	NRSA63J-472X	MG R	4.7kΩ 1/16W J
	R8030	NRSA63J-223X	MG R	22kΩ 1/16W J
	R8031	NRSA63J-103X	MG R	10kΩ 1/16W J
	R8032	NRSA63J-683X	MG R	68kΩ 1/16W J
	CAPACITOR			
	C8001	QETN1HM-106Z	E CAP.	10μF 50V M
	C8002	QENC1HM-105Z	E CAP.	1μF 50V M
	C8004	QETN1HM-335Z	E CAP.	3.3μF 50V M
	C8005	NCB31EK-473X	C CAP.	0.047μF 25V K
	C8006	QETN1HM-106Z	E CAP.	10μF 50V M
	C8007	QENC1HM-105Z	E CAP.	1μF 50V M
	C8008	NCB31EK-473X	C CAP.	0.047μF 25V K
	C8011	QETN1HM-106Z	E CAP.	10μF 50V M
	C8012	NCB21CK-224X	C CAP.	0.22μF 16V K
	C8013	QETN1CM-107Z	E CAP.	100μF 16V M
	C8014	QETN1CM-107Z	E CAP.	100μF 16V M
	C8015	NCF31CZ-104X	C CAP.	0.1μF 16V Z
	C8016	NCF31CZ-104X	C CAP.	0.1μF 16V Z
	C8017	NDC31HJ-680X	C CAP.	68pF 50V J
	C8018	QETN1HM-106Z	E CAP.	10μF 50V M
	C8019	QETN1HM-106Z	E CAP.	10μF 50V M
	DIODE			
	D8001	MA111-X	SI.DIODE	
	D8004	MA111-X	SI.DIODE	
	D8005	MA111-X	SI.DIODE	
	TRANSISTOR			
	Q8001	2SC2412K/QR/-X	SI.TRANSISTOR	
	Q8002	2SA1037AK/QR/-X	SI.TRANSISTOR	
	Q8003	2SA1037AK/QR/-X	SI.TRANSISTOR	
	Q8004	2SC2412K/QR/-X	SI.TRANSISTOR	
	Q8005	2SC2412K/QR/-X	SI.TRANSISTOR	
	Q8006	2SC2412K/QR/-X	SI.TRANSISTOR	
	Q8007	2SC2412K/QR/-X	SI.TRANSISTOR	
	Q8008	2SC2412K/QR/-X	SI.TRANSISTOR	
	Q8009	2SC3837K/NP/-X	SI.TRANSISTOR	
	IC			
	IC8001	TC74VHC86F-X	I.C.	
	IC8002	NJM2234M-XE	I.C.	
	OTHERS			
	CN8005	QGB1505K1-25	B TO B CONNECTOR	
	CN8006	QGB2514J1-50	B TO B CONNECTOR	

PACKING

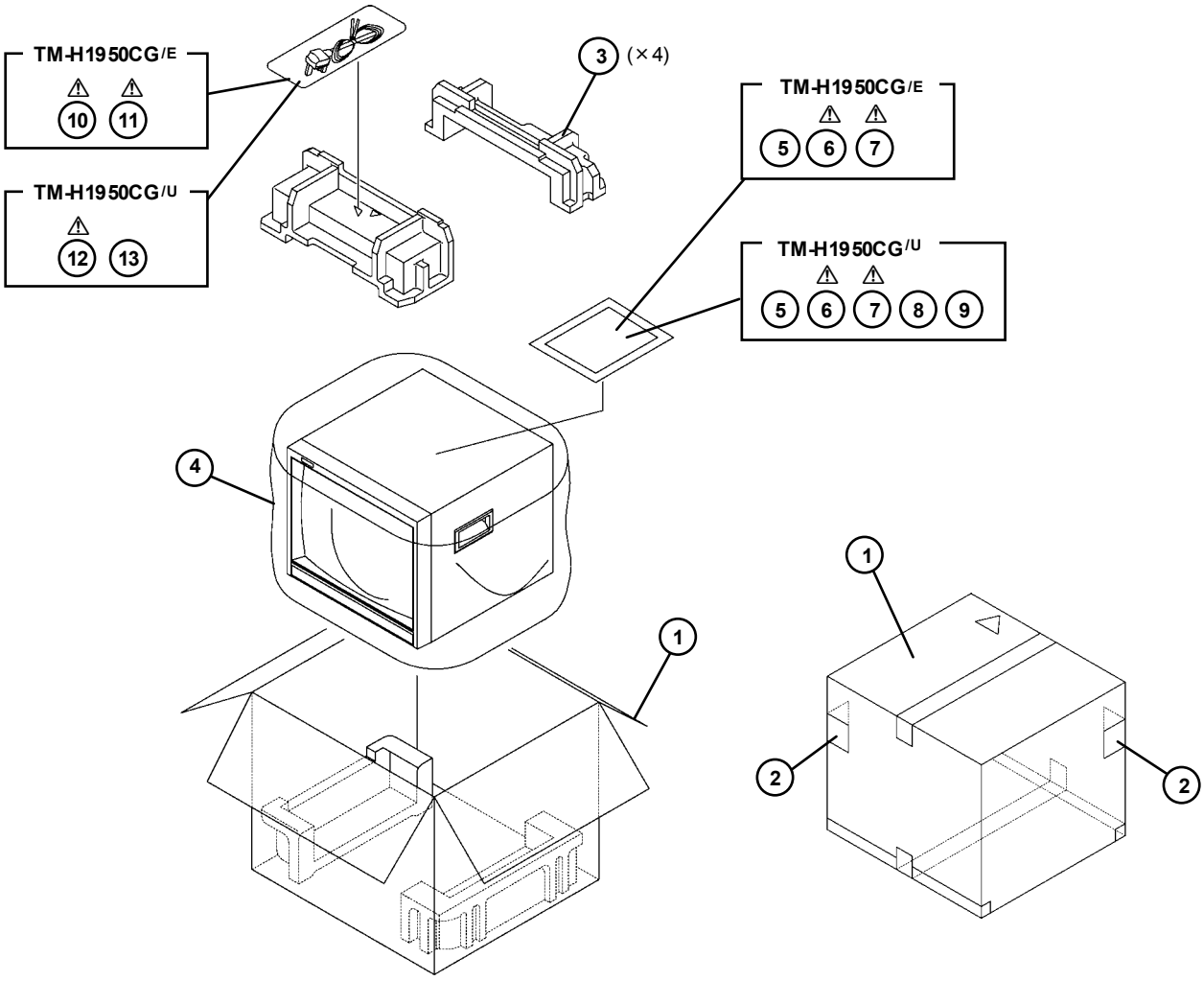

PACKING PARTS LIST

⚠	Ref.No.	Part No.	Part Name	Description
	TM-H1950CG/E			
	1	LC10845-033A-H	PACKING CASE	
	2	LC20989-001A-H	CORNER LABEL	(×2)
	3	LC11370-001A-H	CUSHION ASSY	4pcs in 1set
	4	CP30974-005-H	POLY BAG	
	5	CP30966-001-H	POLY BAG	
⚠	6	LCT1025-002A-H	INST BOOK	
⚠	7	LC41257-001A	STOPPER ASSY	
⚠	10	QMPP010-200-JC	POWER CORD	
⚠	11	QMPL040-200-JC	POWER CORD	
	TM-H1950CG/U			
	1	LC10845-033A-H	PACKING CASE	
	2	LC20989-001A-H	CORNER LABEL	(×2)
	3	LC11370-001A-H	CUSHION ASSY	4pcs in 1set
	4	CP30974-005-H	POLY BAG	
	5	CP30966-001-H	POLY BAG	
⚠	6	LCT1025-002A-H	INST BOOK	
⚠	7	LC41257-001A	STOPPER ASSY	
	8	BT-51010-2	WARRANTY CARD	
	9	BT-51024-1H	SERVICE INF CARD	
⚠	12	QMP1110-244K	POWER CORD	
	13	QPA01203005	POLY BAG	

Memo

VICTOR COMPANY OF JAPAN, LIMITED
HOME AV NETWORK BUSINESS UNIT 12, 3-chome, Moriya-cho, Kanagawa-ku, Yokohama, Kanagawa-prefecture, 221-8528, Japan

TMH1950CGE-H
TMH1950CGU-H

Printed in Japan
VP 0206
DP3051

CONTENTS

SEMICONDUCTOR SHAPES ---------- 2-2

BLOCK DIAGRAM ---------- 2-3

CIRCUIT DIAGRAMS

SIGNAL INPUT & TALLY PWB CIRCUIT DIAGRAM ---------- 2-5
SIGNAL INPUT PWB CIRCUIT DIAGRAM ---------- 2-7
MAIN & SUB DEF PWB CIRCUIT DIAGRAM ---------- 2-9
MAIN & FRONT CONTROL PWB CIRCUIT DIAGRAM ---------- 2-11
CRT SOCKET PWB CIRCUIT DIAGRAM ---------- 2-13
SLOT PWB CIRCUIT DIAGRAM ---------- 2-15

PATTERN DIAGRAMS

MAIN PWB PATTERN ---------- 2-17
SIGNAL INPUT PWB PATTERN ---------- 2-19
CRT SOCKET PWB PATTERN ---------- 2-21
SUB DEF PWB PATTERN ---------- 2-22
FRONT CONTROL PWB PATTERN ---------- 2-23
TALLY PWB PATTERN ---------- 2-25
SLOT PWB PATTERN ---------- 2-26

SEMICONDUCTOR SHAPES

TRANSISTOR

BOTTOM VIEW	FRONT VIEW				TOP VIEW
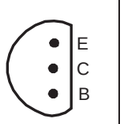	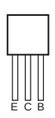	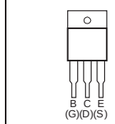	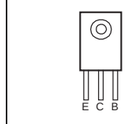	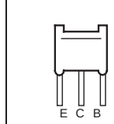	CHIP TR 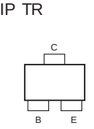

IC

BOTTOM VIEW	FRONT VIEW			TOP VIEW
	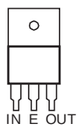	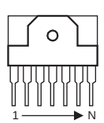	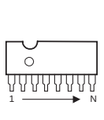	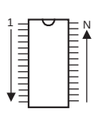

CHIP IC

TOP VIEW		
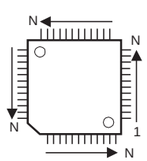	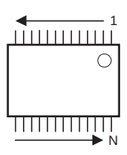	

TM-H1950CG/E,TM-H1950CG/U
STANDARD CIRCUIT DIAGRAM

■ NOTE ON USING CIRCUIT DIAGRAMS

1.SAFETY

The components identified by the ⚠ symbol and shading are critical for safety. For continued safety replace safety critical components only with manufactures recommended parts.

2.SPECIFIED VOLTAGE AND WAVEFORM VALUES

The voltage and waveform values have been measured under the following conditions.

(1)Input signal	: Colour bar signal
(2)Setting positions of each knob/button and variable resistor	: Original setting position when shipped
(3)Internal resistance of tester	:DC 20kΩ/V
(4)Oscilloscope sweeping time	:H ⇒ 20μS/div :V ⇒ 5mS/div :Others ⇒ Sweeping time is specified
(5)Voltage values	:All DC voltage values

∗ Since the voltage values of signal circuit vary to some extent according to adjustments, use them as reference values.

3.INDICATION OF PARTS SYMBOL [EXAMPLE]

● In the PW board :R1209 → R209

4.INDICATIONS ON THE CIRCUIT DIAGRAM

(1)Resistors

● Resistance value

No unit	:[Ω]
K	:[K Ω]
M	:[M Ω]

● Rated allowable power

No indication	:1/ 16 [W]
Others	:As specified

● Type

No indication	:Carbon resistor
OMR	:Oxide metal film resistor
MFR	:Metal film resistor
MPR	:Metal plate resistor
UNFR	:Uninflammable resistor
FR	:Fusible resistor

∗ Composition resistor 1/2 [W] is specified as 1/2S or Comp.

(2)Capacitors

● Capacitance value

1 or higher	:[pF]
less than 1	:[μF]

● Withstand voltage

No indication	:DC50[V]
Others	:DC withstand voltage [V]
AC indicated	:AC withstand voltage [V]

∗ Electrolytic Capacitors
47/50[Example]:Capacitance value [μF]/withstand voltage[V]

● Type

No indication	:Ceramic capacitor
MM	:Metalized mylar capacitor
PP	:Polypropylene capacitor
MPP	:Metalized polypropylene capacitor
MF	:Metalized film capacitor
TF	:Thin film capacitor
BP	:Bipolar electrolytic capacitor
TAN	:Tantalum capacitor

(3)Coils

No unit	:[μH]
Others	:As specified

(4)Power Supply

 :B1 :B2 (12V)

:9V :5V

∗ Respective voltage values are indicated

(5)Test point

:Test point :Only test point display

(6)Connecting method

 :Connector :Wrapping or soldering

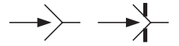 :Receptacle

(7)Ground symbol

:LIVE side ground
:ISOLATED(NEUTRAL) side ground
:EARTH ground
:DIGITAL ground

5.NOTE FOR REPAIRING SERVICE

This model's power circuit is partly different in the GND. The difference of the GND is shown by the LIVE : (⊥) side GND and the ISOLATED(NEUTRAL) : (⏚) side GND.Therefore, care must be taken for the following points.

(1)Do not touch the LIVE side GND or the LIVE side GND and the ISOLATED(NEUTRAL) side GND simultaneously. If the above caution is not respected, an electric shock may be caused. Therefore, make sure that the power cord is surely removed from the receptacle when, for example, the chassis is pulled out.

(2)Do not short between the LIVE side GND and ISOLATED(NEUTRAL) side GND or never measure with a measuring apparatus measure with a measuring apparatus (oscilloscope, etc.) the LIVE side GND and ISOLATED(NEUTRAL) side GND at the same time. If the above precaution is not respected , a fuse or any parts will be broken.

◇ **Since the circuit diagram is a standard one, the circuit and circuit constants may be subject to change for improvement without any notice.**

NOTE

◇ **Due improvement in performance, some part numbers show in the circuit diagram may not agree with those indicated in the part list.**
When ordering parts, please use the numbers that appear in the Parts List.

BLOCK DIAGRAM

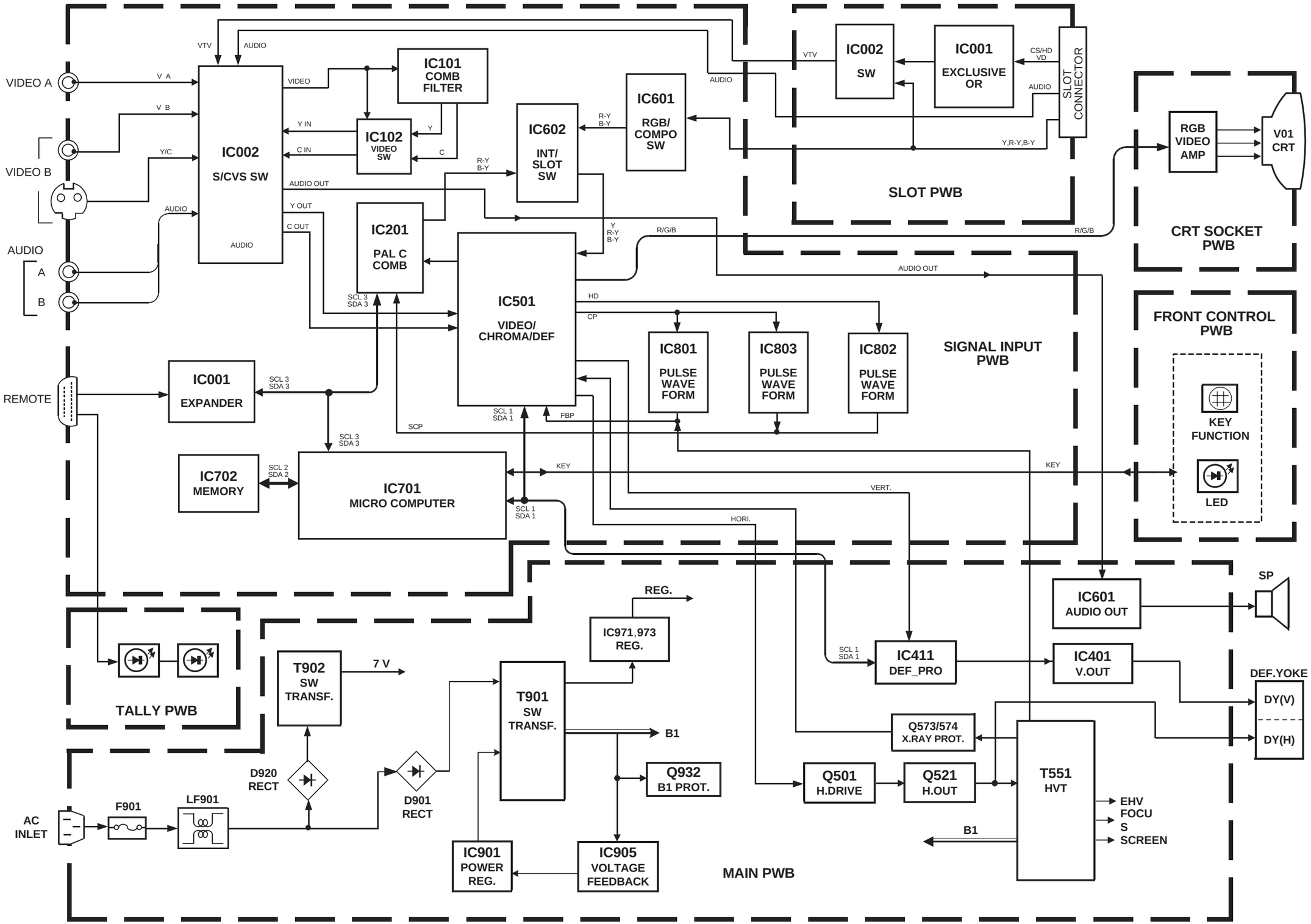

CIRCUIT DIAGRAMS *SIGNAL INPUT & TALLY PWB CIRCUIT DIAGRAMS* [1/2]

SIGNAL INPUT PWB (1/2)

FX-6103A-H2

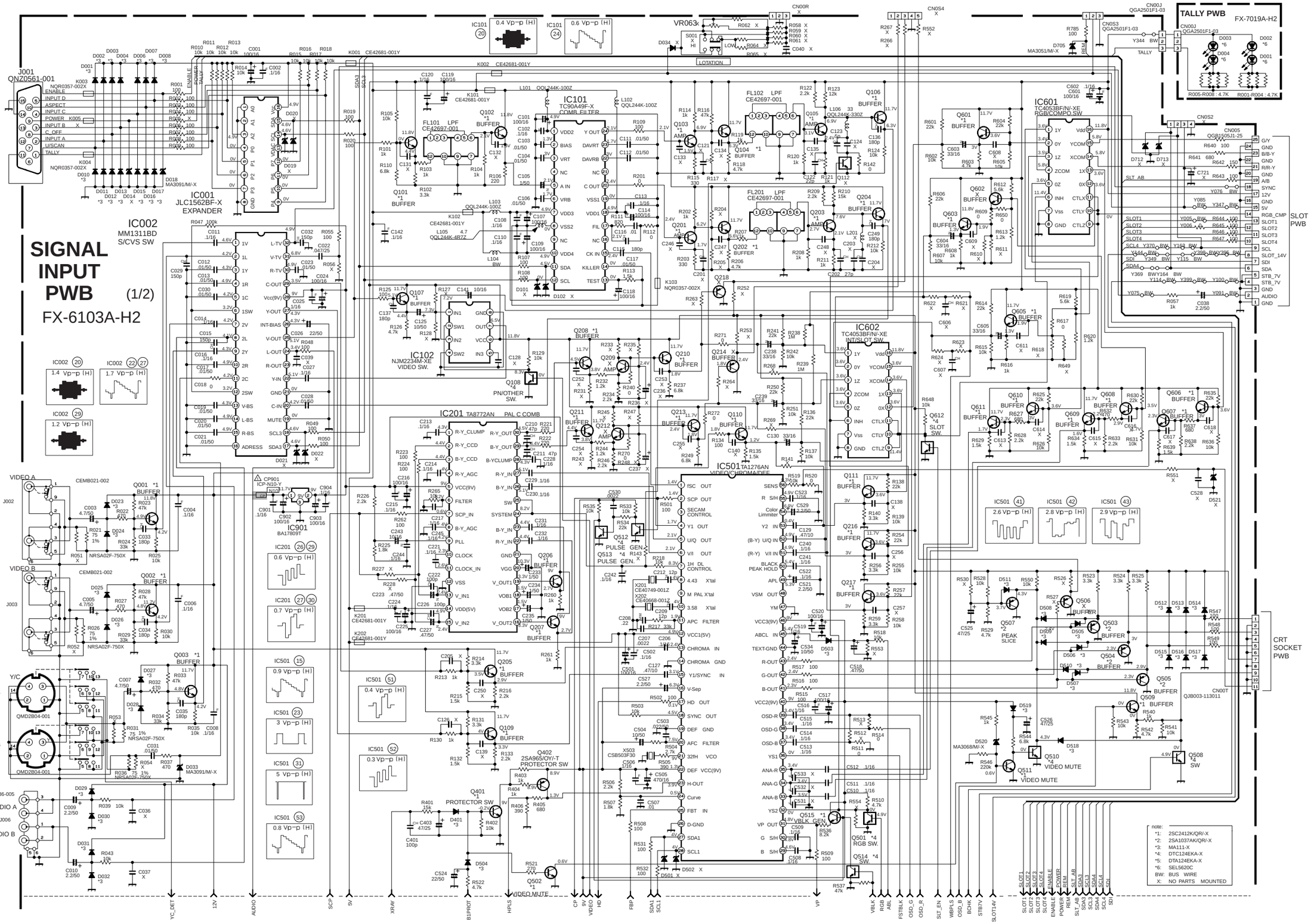

SIGNAL INPUT PWB CIRCUIT DIAGRAM [2/2]

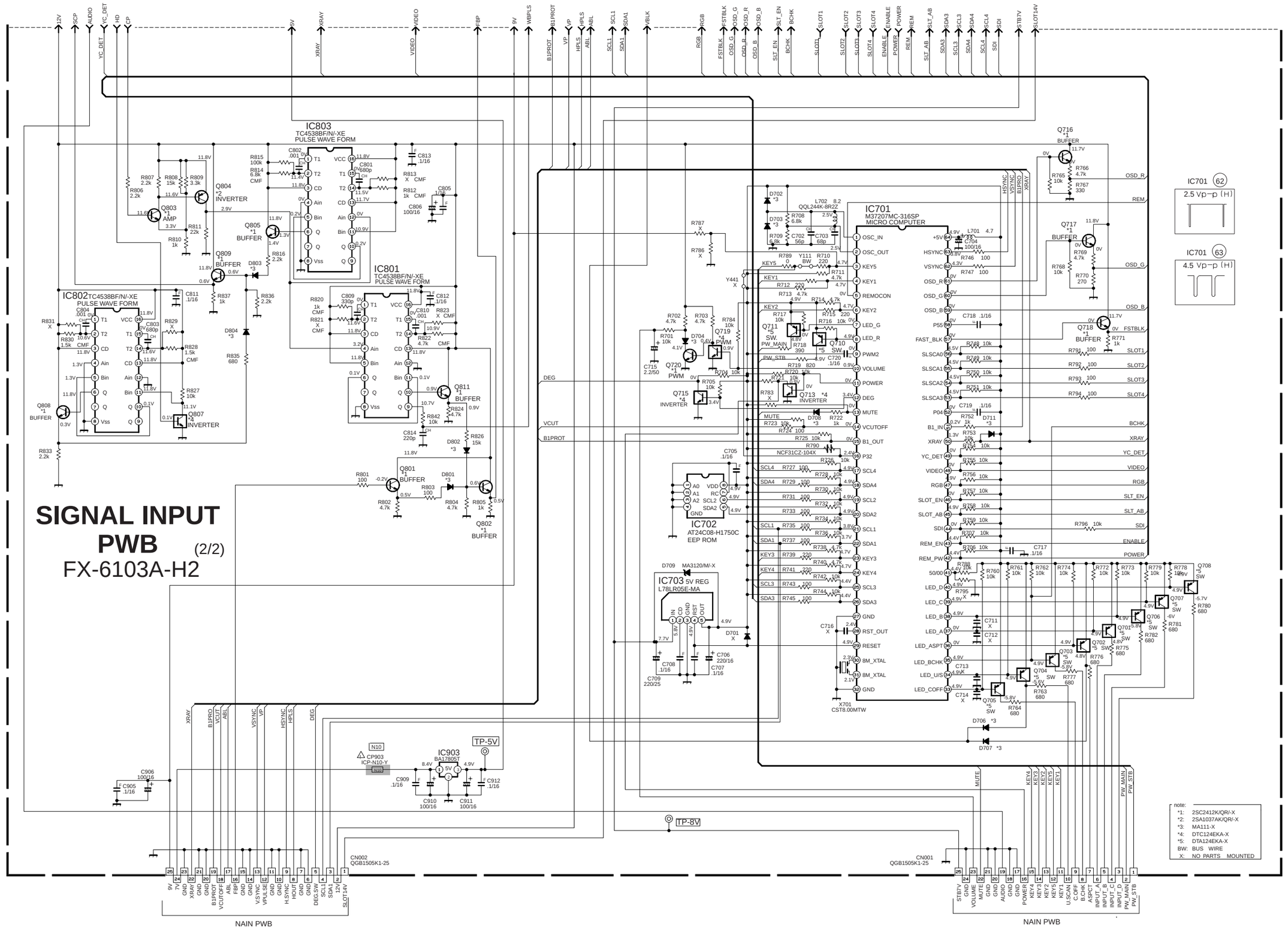

MAIN & SUB DEF PWB CIRCUIT DIAGRAM

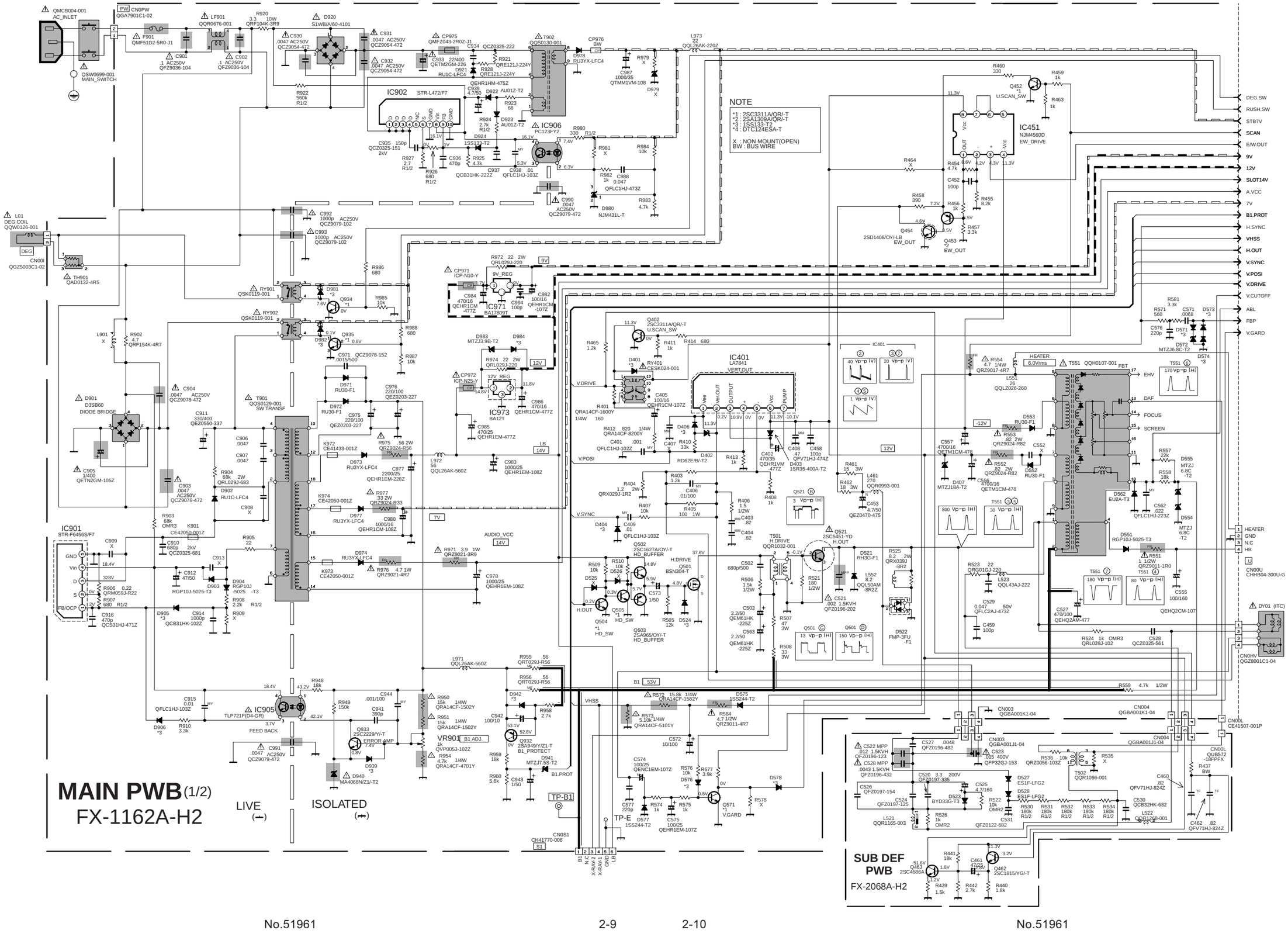

MAIN & FRONT CONTROL PWB CIRCUIT DIAGRAM

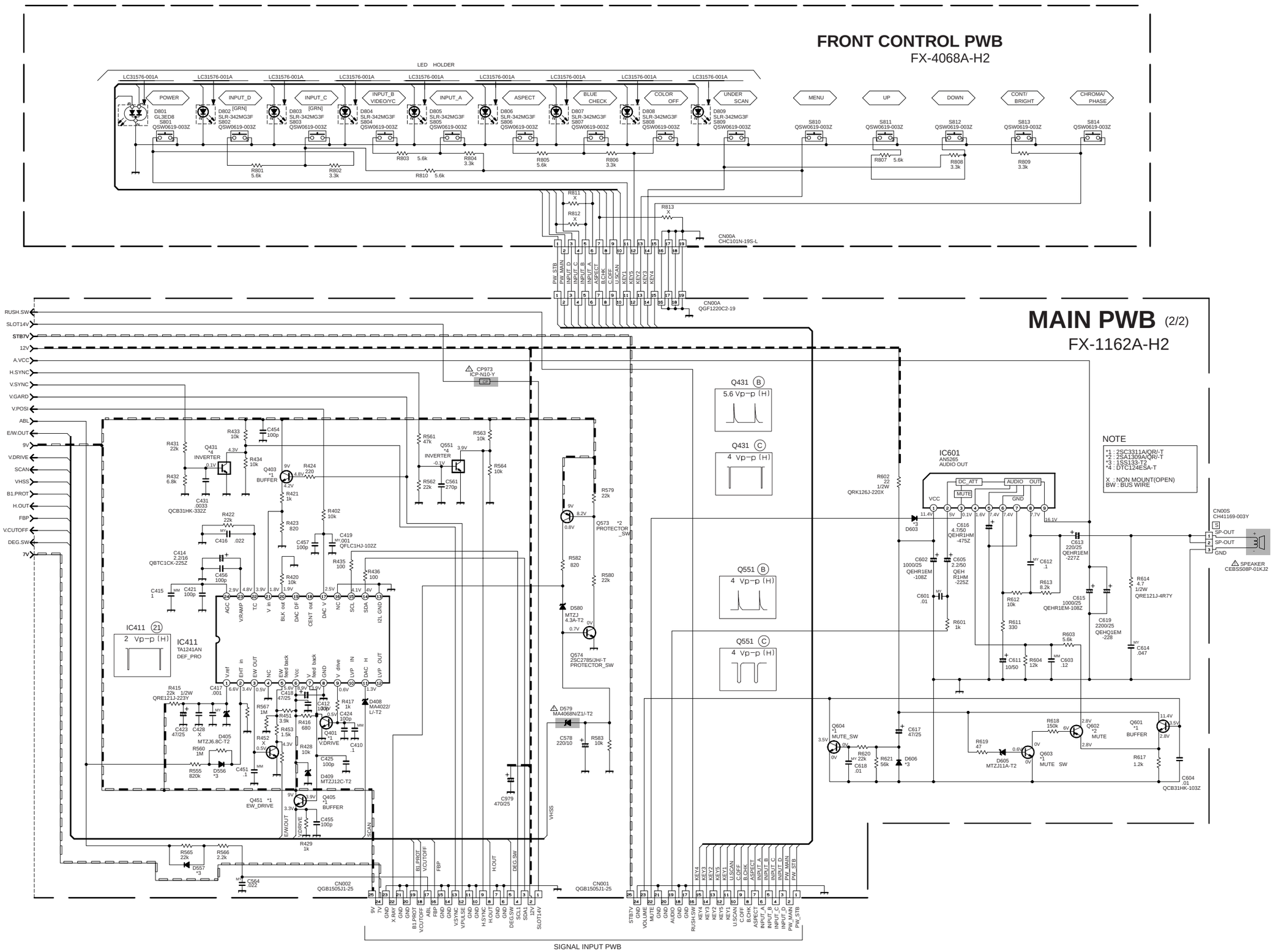

CRT SOCKET PWB CIRCUIT DIAGRAM

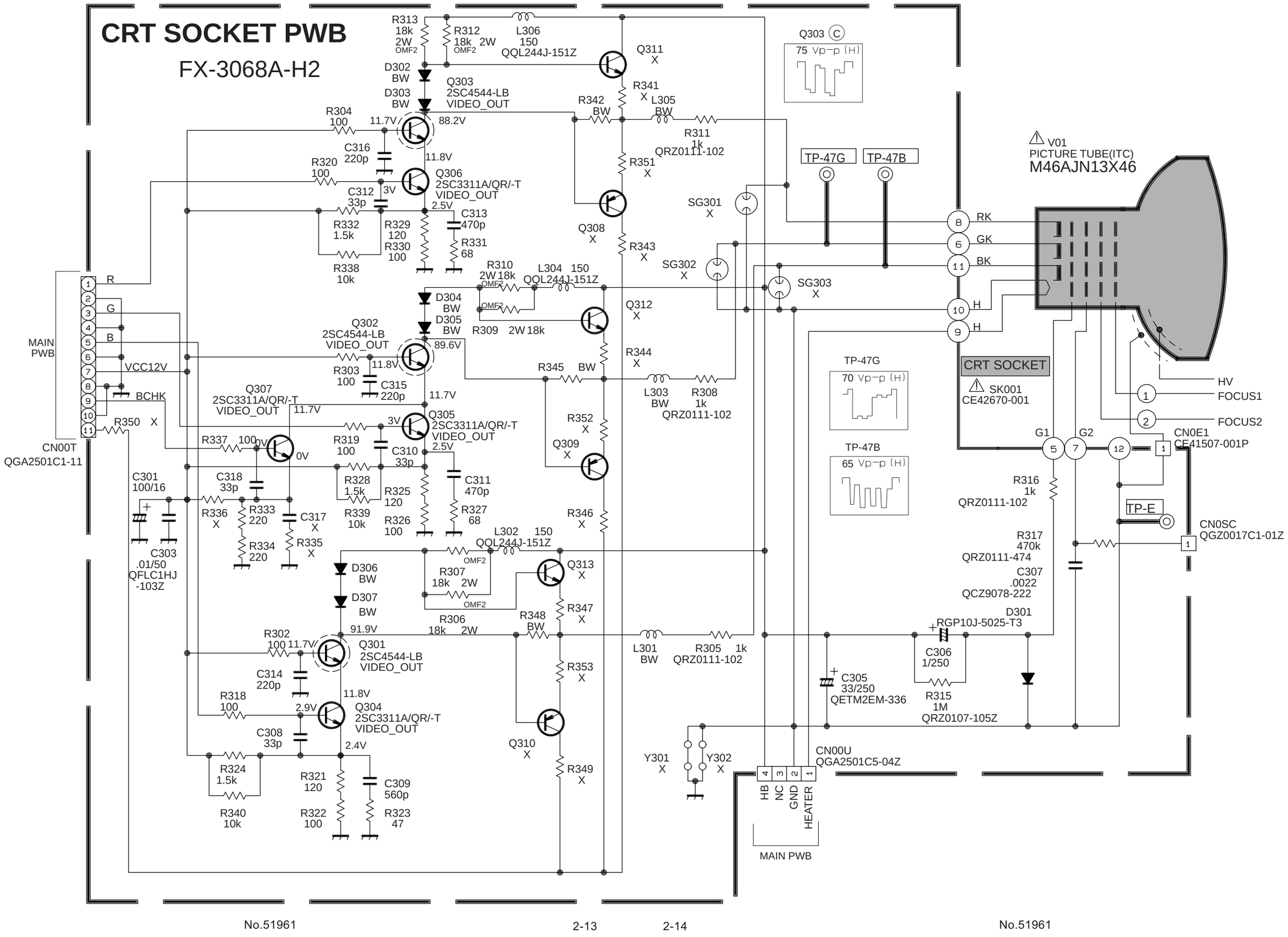

SLOT PWB CIRCUIT DIAGRAM

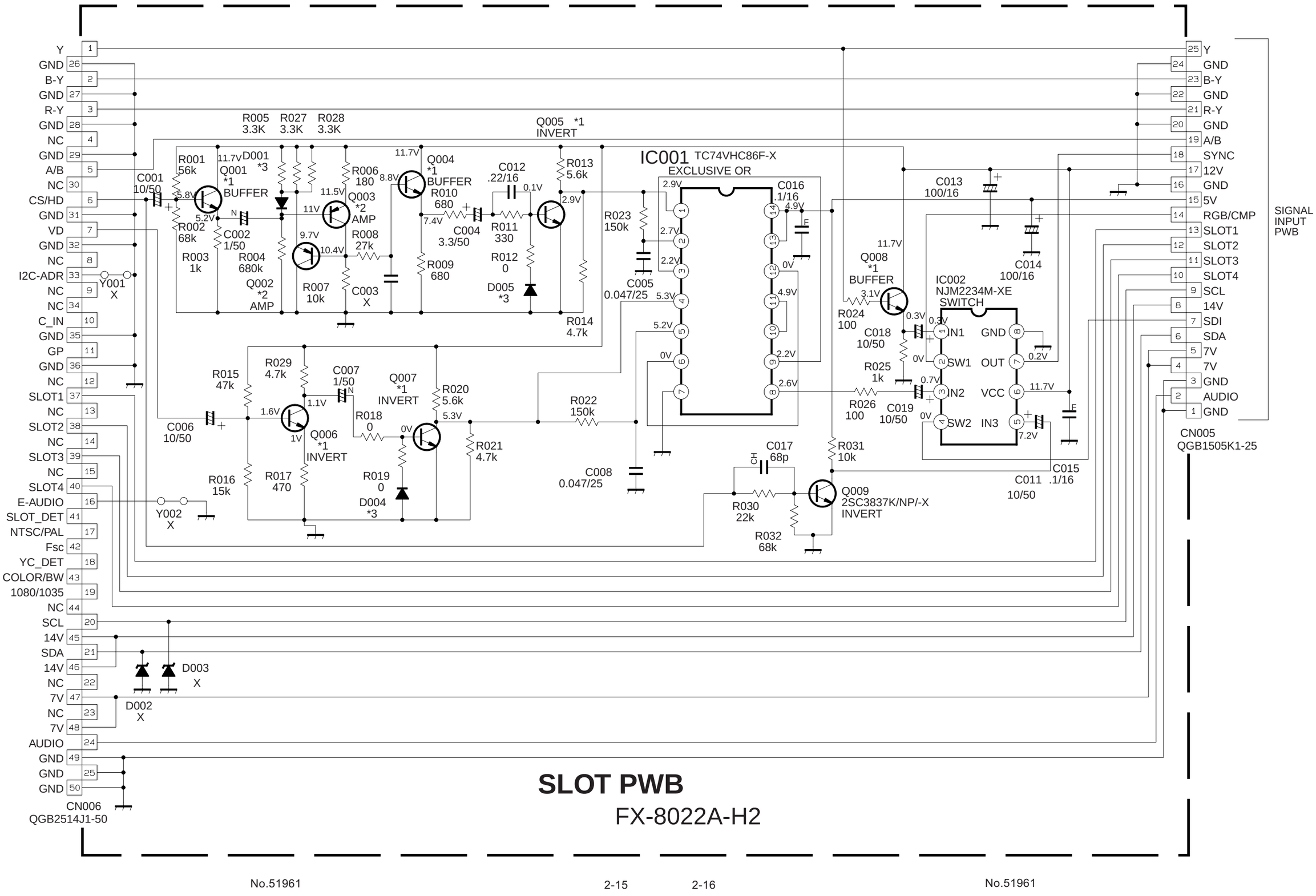

SLOT PWB

FX-8022A-H2

PATTERN DIAGRAMS *MAIN PWB PATTERN*

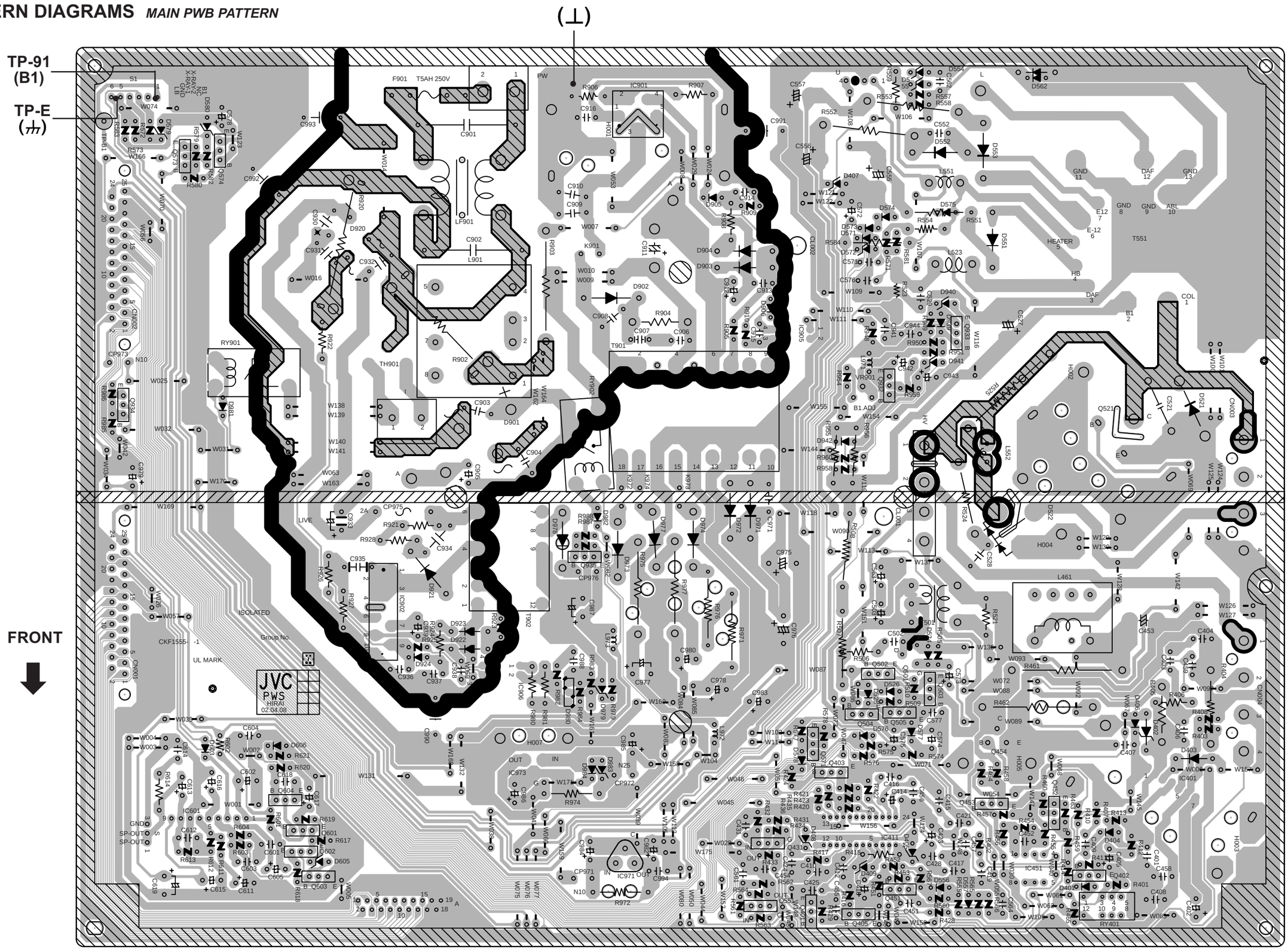

SIGNAL INPUT PWB PATTERN

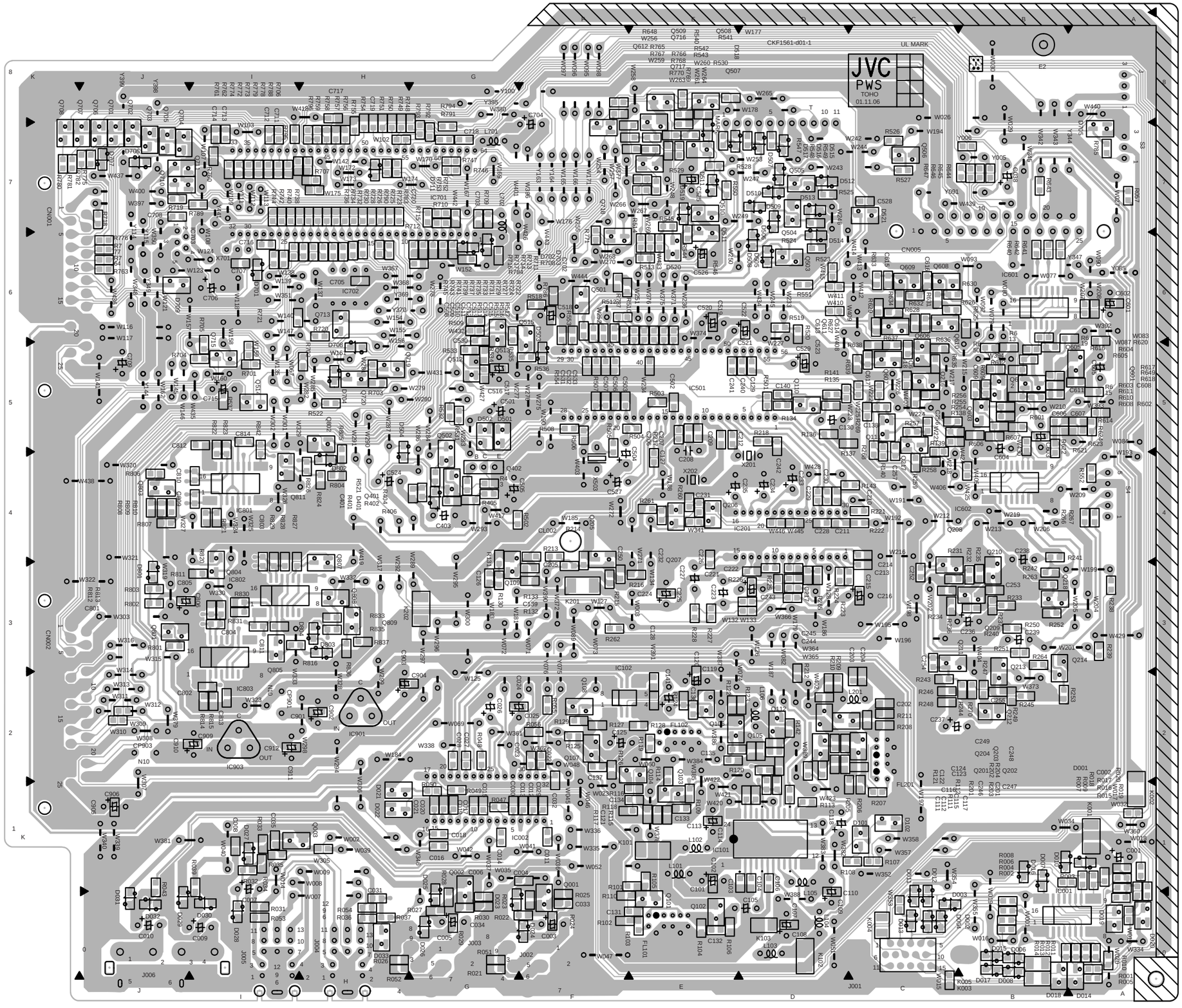

TM-H1950CG

CRT SOCKET PWB PATTERN

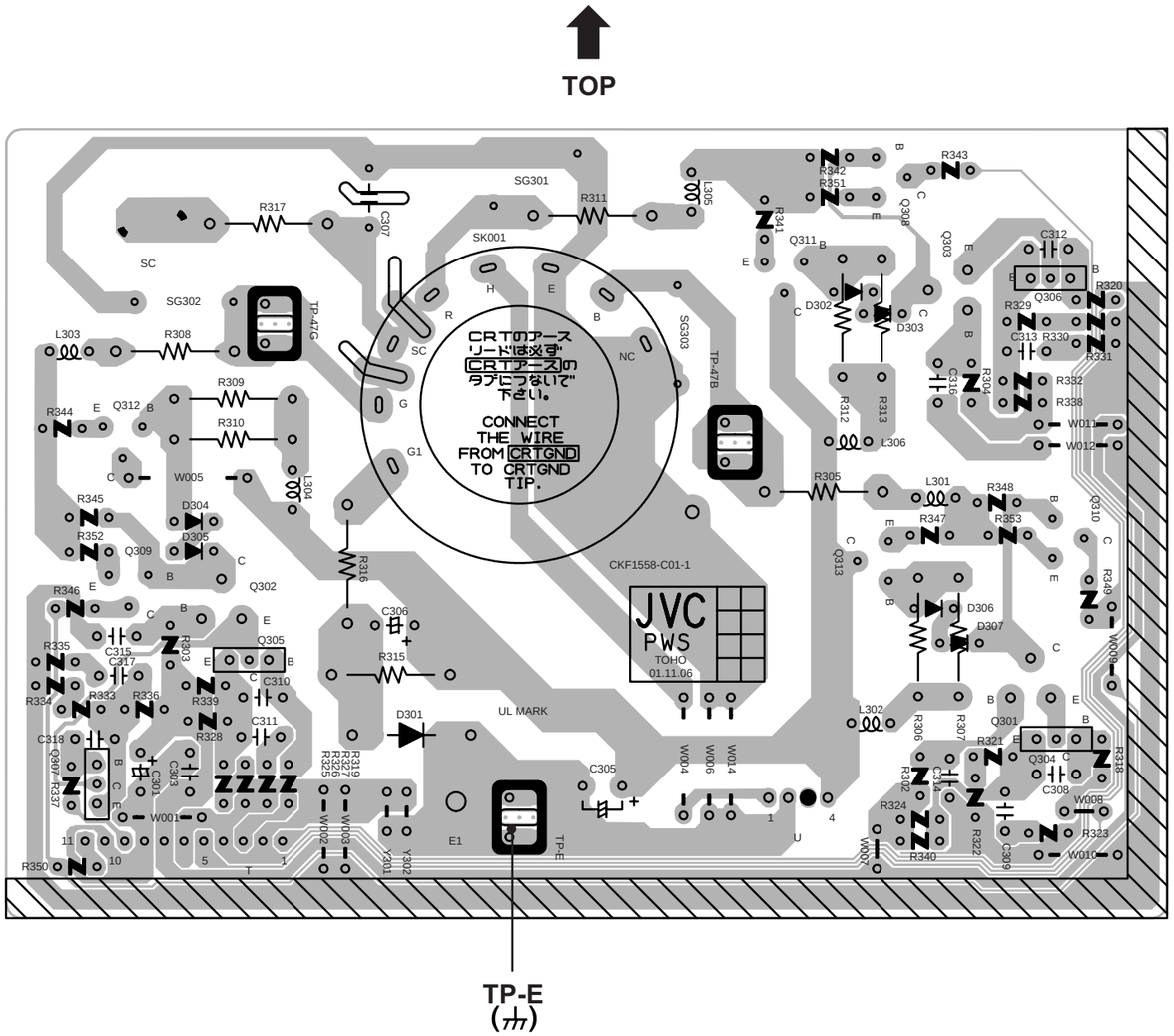

SUB DEF PWB PATTERN

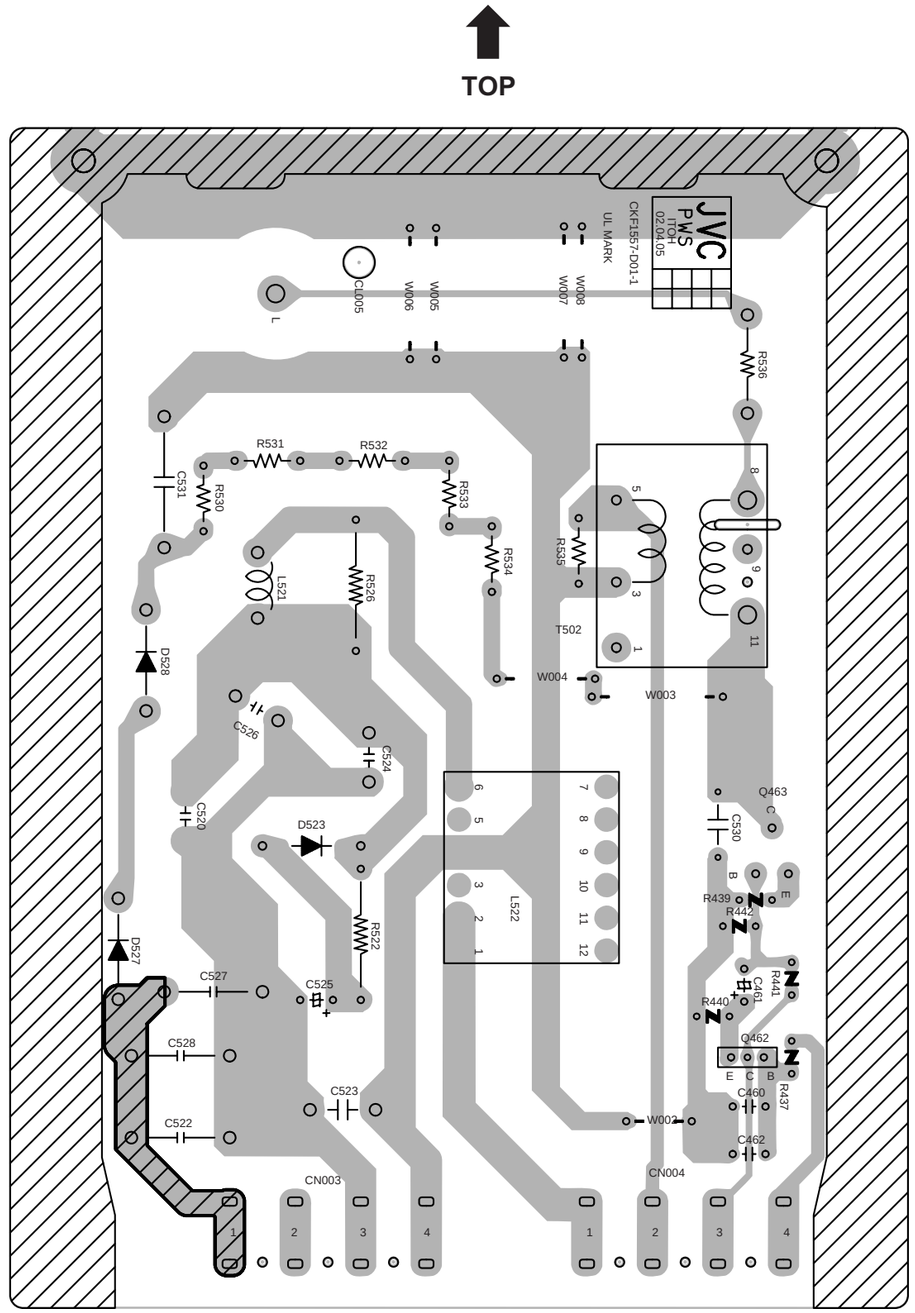

No.51961

FRONT CONTROL PWB PATTERN

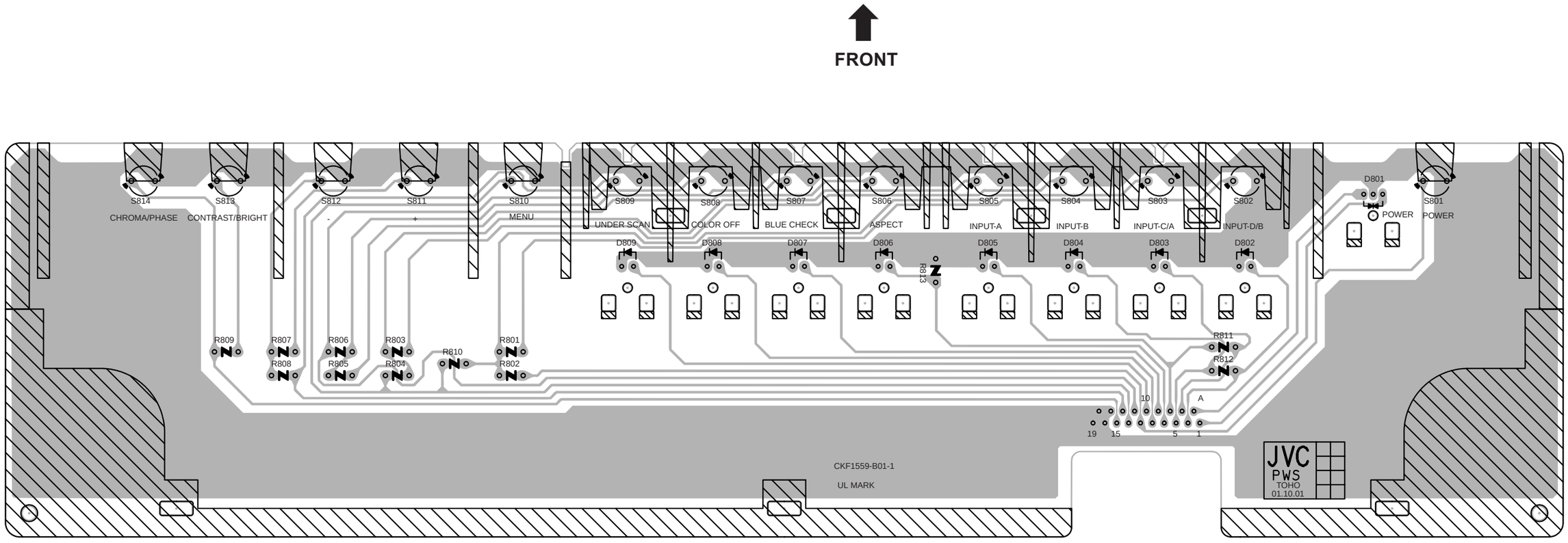

TALLY PWB PATTERN

TOP

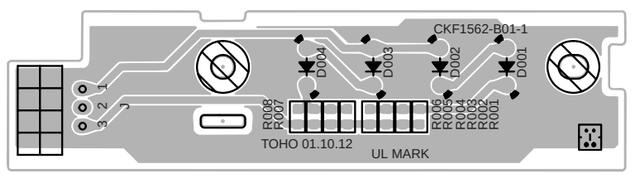

SLOT PWB PATTERN

TOP

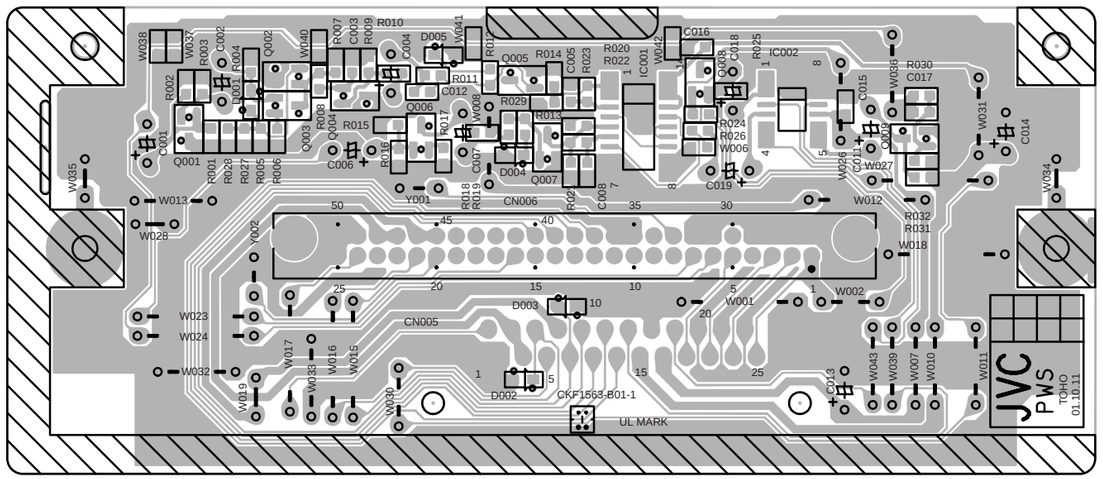

JVC

SERVICE MANUAL

COLOUR VIDEO MONITOR

TM-H1950CG/C

BASIC CHASSIS
S1

Supplementary

The following items for the TM-H1950CG/C model were changed partly from TM-H1950CG/E model. Therefore, this service manual describes only the items which differ from those of the TM-H1950CG/E model service manual.
For details other than those described in this manual, please refer to the TM-H1950CG/E model service manual (No.51961, Jun.2002).

OUTLINE

Since the production place of the model has been changed, changes are presented here.

HOW TO IDENTIFY MODELS

"TM-H1950CGC" is added to the serial No. under at the Rating label.

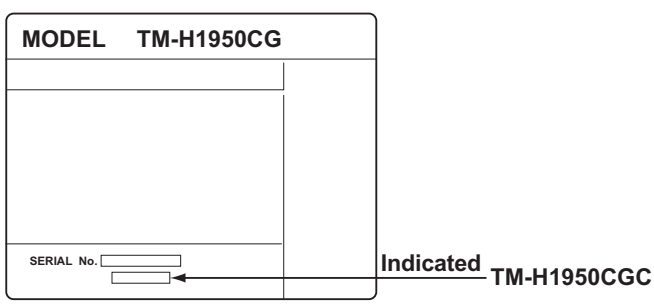

COPYRIGHT © 2003 VICTOR COMPANY OF JAPAN, LTD.

No.51961B
2003/05

DIFFERENCE LIST

EXPLODED VIEW PARTS LIST (II) (Page 42)

⚠	Ref. No.	PARTS No.		PARTS NAME	DESCRIPTION
		TM-H1950CG/E	TM-H1950CG/C		
⚠	23	LC20910-001B-0L	LC21304-001A-0L	ROLL R LABEL	

PACKING PARTS LIST (Page 52)

A set of parts list is listed here because of a change of packing.

⚠	Ref. No.	PARTS No.	PARTS NAME	DESCRIPTION
	1	LC10845-033A-H	PACKING CASE	Inner
	2	LC20989-001A-H	CORNER LABEL	(x2)
	3	LC11370-001A-H	CUSHION ASSY	Inner, 4pcs in 1set
	4	CP30967-003-H	POLY BAG	
	5	CP30966-001-H	POLY BAG	
⚠	6	LCT1345-001A-H	INST BOOK	
⚠	7	LC41257-001A	STOPPER ASSY	
⚠	10	QMPS210-200-JC	POWER CORD(EK)	2m BLACK, Inc.Poly bag
	12	LC31100-001A-H	CORNER CUSHION	Outer(x8)
	13	LC11194-016A-H	PACKING CASE	Outer

PACKING

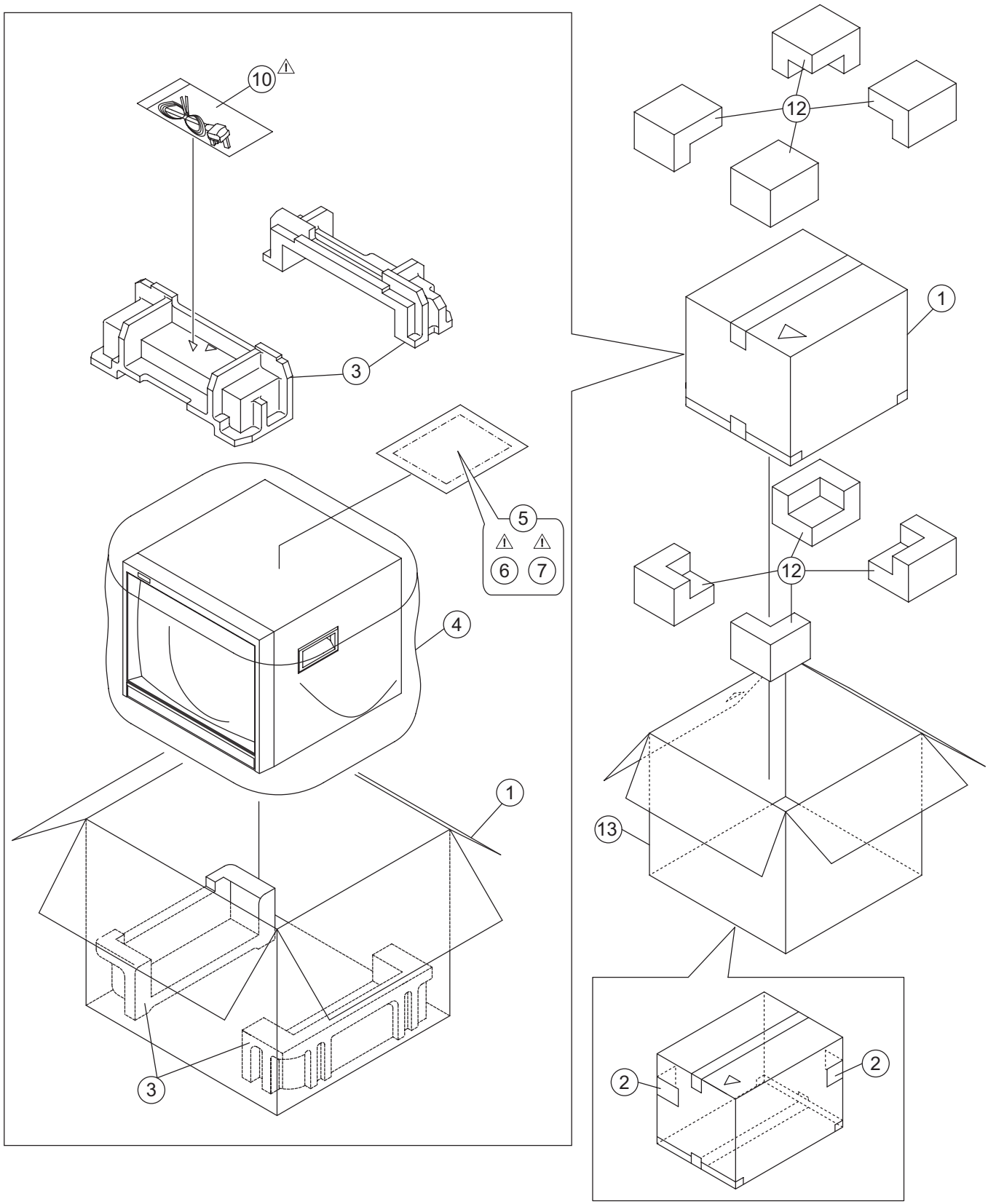

JVC

VICTOR COMPANY OF JAPAN, LIMITED
AV & MULTIMEDIA COMPANY DISPLAY CATEGORY 12, 3-chome, Moriya-cho, kanagawa-ku, Yokohama, kanagawa-prefecture, 221-8528, Japan

(No.51961B)

Printed in Japan
200305WPC

JVC

SERVICE MANUAL

COLOUR VIDEO MONITOR

BASIC CHASSIS
S1

TM-H1950CG/E, TM-H1950CG/U, TM-H1950CG/C

Supplementary

Some parts of circuits of this model are changed for improvement of performance.
This Service Manual describes the differences because of the circuit change.
This Service Manual consists of Service Manual, differences in STANDARD CIRCUIT DIAGRAM and DIFFERENCE PARTS LIST.
For details other than those described in this manual, please refer to the TM-H1950CG/E , TM-H1950CG/U Service Manual (No.51961, Jun. 2002) and TM-H1950CG/C Service Manual (No.51961B 2003/05).

■ OUTLINE

According to a monitor's installation condition, it may be influenced by a magnetic field and irregular colour may be caused.
In order to avoid this, the landing(irregular colour) correction function was added.
Therefore, the SIGNAL INPUT PWB is changed because a landing coil is added and a correction circuit is supported.

TABLE OF CONTENTS

■ DISTINCTION 2
■ MAIN DIFFERENCES 2
■ NOTICE IN REPLACING MEMORY IC 2
■ DIFFERENCES 3
■ CIRCUIT DIAGRAMS 5
■ PATTERN DIAGRAMS 10
■ DIFFERENT PARTS LIST 13

COPYRIGHT © 2004 VICTOR COMPANY OF JAPAN, LIMITED

No.51961C
2004/3

■ DISTINCTION

" A " is indicated in a distinction of rating label.

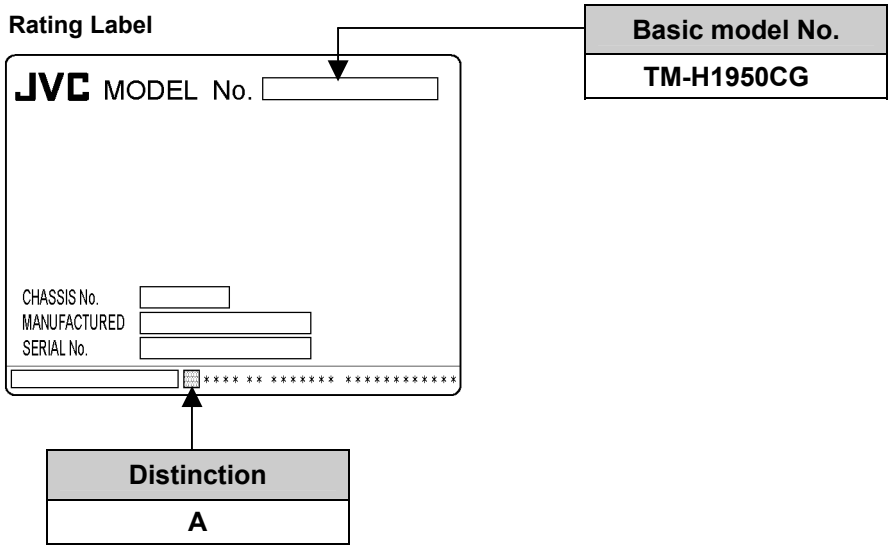

■ MAIN DIFFERENCES

ITEM	PREVIOUS	NEW
LANDING COIL (LANDING FUNCTION)	× (No)	○ (Yes)
SIGNAL INPUT PWB	FX-6103A-H2	FX-6103B-H2
MICRO COMPUTER (IC6701)	M37207MC-316SP	M37207MC-322SP
MEMORY IC (IC6702)	AT24C08-H1750C	AT24C08-H1750CA
SERVICE MODE **CONTROL BLOCK** **< C34 : 001 >** **< C35 : 000 >**	× (No)	○ (Yes)

■ NOTICE IN REPLACING MEMORY IC

- The previous memory IC cannot be used for a new CPU with landing correction function.
- Be sure to use a new memory IC for a new CPU.
- Since a new CPU is programmed to be upper-compatible with the previous circuit, use a new CPU together with a new memory IC.

■ DIFFERENCES

1. “REPLACEMENT OF MEMORY IC” in “SPECIFIC SERVICE INSTRUCTIONS”

BLOCK SELECT ITEMS (Page 11)

CONTROL BLOCK

ITEM	CONTENTS
C01	DESTINATION (000 : For Japan, 001 : For Europe / US)

CHANGE

ITEM	CONTENTS
C01	DESTINATION (000 : For Japan, 001 : For Europe / US, **010 : For OEM**)
C34	**LANDING ENABLE**
C35	**LANDING START**

ADDITION

2. In “ADJUSTMENT”

BASIC ADJUSTMENT OF LANDING CORRECTION <ADDITIONAL ITEMS>

(1) ADJUSTMENT PROCEDURE

1) Input the whole white signal.
2) Press [**MENU**] and [**CONTRAST / BRIGHT**] button simultaneously.
   LANDING : ∗ ∗ is displayed on the screen (Fig. 1).
3) Adjust to the state where irregular colour is not most conspicuous with [**VOLUME / SELECT(+ / –)**] buttons (Fig. 1).
4) If adjustment is completed, return with [**MENU**] button (Fig. 1).

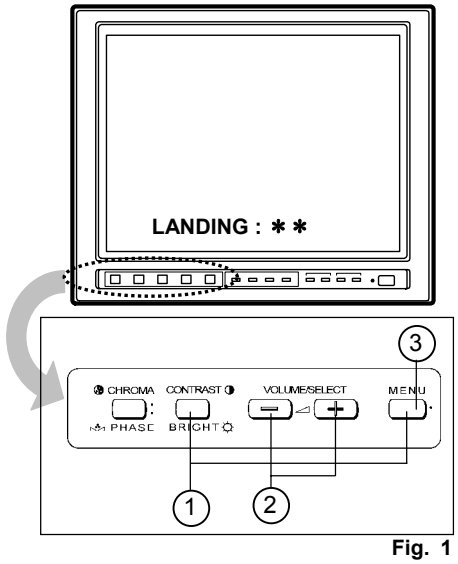

Fig. 1

3. In “ADJUSTMENT”

INITIAL SETTINGS OF THE SERVICE MENU (Page 25)

Items shown in ▭ in the following tables are fixed value. Never change the items.

CONTROL BLOCK

CHANGED ITEM

ITEM	CONTENTS	VARIABLE RANGE
C01	DESTINATION 0 : FOR JAPN (9300) 1 : FOR EUROPE / US (6500)	000 ～ 001

CHANGE

ITEM	CONTENTS	VARIABLE RANGE
C01	DESTINATION 000 : FOR JAPAN (9300) 001 : FOR EUROPE / US (6500) **010 : FOR OEM (9300)**	000 ～ **129**

ADDITIONAL ITEM

ITEM	CONTENTS	VARIABLE RANGE	ATTRIBUTE	INITIAL VALUE
C34	**LANDING ENABLE**	**000 ～ 001**	**FIXED**	**001**
C35	**LANDING START**	**000 ～ 001**	**FIXED**	**000**

■ DIFFERENT PARTS LIST

USING P.W. BOARD (Page 40)

P.W.B. ASS'Y	Parts No.	
	PREVIOUS	NEW
SIGNAL INPUT P.W.B ASS'Y	FX-6103A-H2	**FX-6103B-H2**
SLOT P.W.B ASS'Y	FX-8022A-H2	**FX-8022B-H2**

EXPLODED VIEW PARTS LIST (Ⅰ) (Page 41)

⚠	Ref. No.	Parts No.		Parts Name	Description
		PREVIOUS	NEW		
	29	————————	**LC41408-001A**	SPACER	(×2) ADDITION

EXPLODED VIEW (Ⅰ)

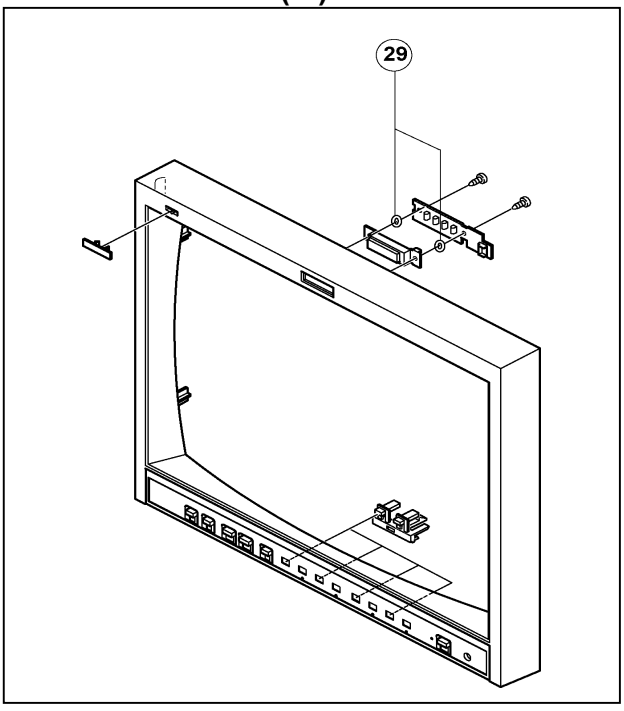

EXPLODED VIEW (Ⅱ)

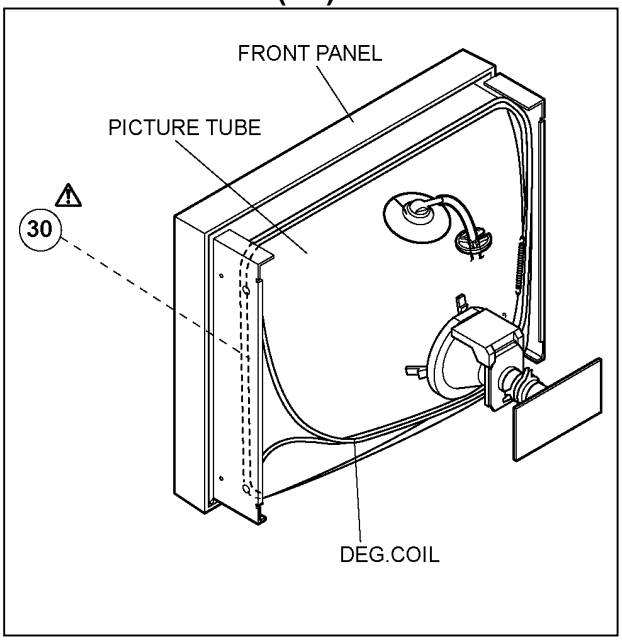

EXPLODED VIEW PARTS LIST (Ⅱ) (Page 42~43)

⚠	Ref. No.	Parts No.		Parts Name	Description
		PREVIOUS	NEW		
⚠	30	————————	**QQW0141-001**	LANDING COIL	ADDITION

PRINTED WIRING BOARD PARTS LIST

SIGNAL INPUT P.W. BOARD ASS'Y (Page 48~52)

⚠	Symbol No.	Parts No.		Parts name	Description
		PREVIOUS	NEW		
		FX-6103A-H2	FX-6103B-H2		
	R6063	————————	**NRSA63J-0R0X**	MG R	0.0Ω 1/16W J
	R6064	————————	**NRSA63J-0R0X**	MG R	0.0Ω 1/16W J
	R6066	————————	**NRSA63J-153X**	MG R	15kΩ 1/16W J
	R6067	————————	**NRSA63J-102X**	MG R	1KΩ 1/16W J
	R6068	————————	**NRSA63J-103X**	MG R	10KΩ 1/16W J
	R6069	————————	**NRSA63J-102X**	MG R	1KΩ 1/16W J
	R6071	————————	**QRE121J-150Y**	C R	15Ω 1/2W J
	R6072	————————	**NRSA63J-123X**	MG R	12KΩ 1/16W J
	R6073	————————	**NRSA63J-103X**	MG R	10KΩ 1/16W J
	R6074	————————	**NRSA63J-0R0X**	MG R	0.0Ω 1/16W J
	R6706	NRSA63J-103X	————————	MG R	DELETE
	R6790	NCF31CZ-104X	————————	C CAP	DELETE
	R6797	————————	**NRSA63J-0R0X**	MG R	0.0Ω 1/16W J
	R6798	————————	**NRSA63J-222X**	MG R	2.2KΩ 1/16W J
	C6003	QETN1HM-475Z	**QEHR1HM-475Z**	E CAP	4.7μF 50V M
	C6005	QETN1HM-475Z	**QEHR1HM-475Z**	E CAP	4.7μF 50V M
	C6007	QETN1HM-475Z	**QEHR1HM-475Z**	E CAP	4.7μF 50V M
	C6009	QETN1HM-225Z	**QEHR1HM-225Z**	E CAP	2.2μF 50V M
	C6010	QETN1HM-225Z	**QEHR1HM-225Z**	E CAP	2.2μF 50V M
	C6026	QETN1HM-226Z	**QEHR1HM-226Z**	E CAP	22μF 50V M
	C6038	QETN1HM-225Z	**QEHR1HM-225Z**	E CAP	2.2μF 50V M
	C6040	————————	**NDC31HJ-101X**	C CAP	100pF 50V J
	C6041	————————	**NCB31HK-103X**	C CAP	0.01μF 50V K
	C6043	————————	**QEHR1HM-336Z**	E CAP	33μF 50V M
	C6101	QETN1CM-107Z	**QEHR1CM-107Z**	E CAP	100μF 16V M
	C6105	QENC1HM-105Z	**QTNC1HM-105Z**	BP E CAP.	1μF 50V M
	C6107	QETN1CM-107Z	**QEHR1CM-107Z**	E CAP	100μF 16V M
	C6109	QETN1CM-107Z	**QEHR1CM-107Z**	E CAP	100μF 16V M
	C6118	QETN1CM-107Z	**QEHR1CM-107Z**	E CAP	100μF 16V M
	C6119	QETN1CM-107Z	**QEHR1CM-107Z**	E CAP	100μF 16V M
	C6125	QETN1HM-106Z	**QEHR1HM-106Z**	E CAP	10μF 50V M
	C6130	QENC1CM-336Z	**QTNC1CM-336Z**	BP E CAP.	33μF 16V M
	C6141	QENC1CM-106Z	**QTNC1CM-106Z**	BP E CAP.	10μF 16V M
	C6208	QFV71HJ-224Z	**QFVF1HJ-224Z**	MF CAP.	0.22μF 50V J
	C6216	QETN1CM-107Z	**QEHR1CM-107Z**	E CAP	100μF 16V M
	C6223	QENC1HM-474Z	**NCB31AK-474X**	C CAP	0.47μF 10V K
	C6225	QETN1CM-107Z	**QEHR1CM-107Z**	E CAP	100μF 16V M
	C6227	QENC1HM-474Z	**NCB31AK-474X**	C CAP	0.47μF 10V K
	C6233	QETN1HM-105Z	**QEHR1HM-105Z**	E CAP	1μF 50V M
	C6234	QETN1HM-105Z	**QEHR1HM-105Z**	E CAP	1μF 50V M
	C6235	QETN1HM-105Z	**QEHR1HM-105Z**	E CAP	1μF 50V M

⚠	Symbol No.	Parts No.		Parts name	Description
		PREVIOUS	NEW		
		FX-6103A-H2	FX-6103B-H2		
	C6238	QENC1CM-336Z	**QTNC1CM-336Z**	BP E CAP.	33μF 16V M
	C6239	QENC1CM-336Z	**QTNC1CM-336Z**	BP E CAP.	33μF 16V M
	C6243	QENC1CM-106Z	**QTNC1CM-106Z**	BP E CAP.	10μF 16V M
	C6403	QETN1EM-476Z	**QEHR1VM-476Z**	E CAP.	47μF 35V M
	C6520	QETN1CM-107Z	**QEHR1CM-107Z**	E CAP	100μF 16V M
	C6521	QETN1HM-225Z	**QEHR1HM-225Z**	E CAP	2.2μF 50V M
	C6529	QETN1HM-225Z	**QEHR1HM-225Z**	E CAP	2.2μF 50V M
	C6534	QETN1HM-106Z	**QEHR1HM-106Z**	E CAP	10μF 50V M
	C6722	————————	**NCF31CZ-104X**	C CAP	0.1μF 16V Z
	C6903	QETN1CM-107Z	**QEHR1CM-107Z**	E CAP	100μF 16V M
	D6714	————————	**MA111-X**	SI. DIODE	ADDITION
	IC6003	————————	**BA10358**	IC	ADDITION
	IC6004	————————	**LA6515**	IC	ADDITION
	IC6701	M37207MC-316SP	**M37207MC-322SP**	IC	
	IC6702	AT24C08-H1750C	**AT24C08-H1750CA**	IC	(SERVICE)
	X6701	CST8.00MTW	**QAX0667-001Z**	C RESONATOR	

SLOT P.W. BOARD ASS'Y (Page 53)

⚠	Symbol No.	Parts No.		Parts name	Description
		PREVIOUS	NEW		
		FX-8022A-H2	FX-8022B-H2		
	R8007	NRSA63J-103X	**NRSA63J-223X**	MG R	22KΩ 1/16W J
	R8016	NRSA63J-153X	**NRSA63J-472X**	MG R	4.7KΩ 1/16W J
	R8018	NRSA63J-0R0X	**NRSA63J-101X**	MG R	100Ω 1/16W J
	R8029	NRSA63J-472X	**NRSA63J-222X**	MG R	2.2KΩ 1/16W J
	R8034	————————	**NRSA63J-154X**	MG R	150kΩ 1/16W J
	R8035	————————	**NRSA63J-102X**	MG R	1KΩ 1/16W J
	C8001	QETN1HM-106Z	**QEHR1HM-106Z**	E CAP.	10μF 50V M
	C8002	QENC1HM-105Z	**QTNC1HM-105Z**	BP E CAP.	1μF 50V M
	C8004	QETN1HM-335Z	**QEHR1HM-335Z**	E CAP.	3.3μF 50V M
	C8006	QETN1HM-106Z	**QTNC1HM-106Z**	BP E CAP.	10μF 50V M
	C8007	QENC1HM-105Z	**QEHR1HM-106Z**	E CAP.	10μF 50V M
	C8011	QETN1HM-106Z	**QEHR1HM-106Z**	E CAP.	10μF 50V M
	C8018	QETN1HM-106Z	**QEHR1HM-106Z**	E CAP.	10μF 50V M
	C8019	QETN1HM-106Z	**QEHR1HM-106Z**	E CAP.	10μF 50V M
	C8020	————————	**NCB31HK-152X**	C CAP	1500pF 50V K
	C8021	————————	**NDC31HJ-151X**	C CAP	150pF 50V J

JVC

VICTOR COMPANY OF JAPAN, LIMITED
AV & MULTIMEDIA COMPANY VIDEO DISPLAY CATEGORY 12, 3-chome, Moriya-cho, kanagawa-ku, Yokohama, kanagawa-prefecture, 221-8528, Japan

(No. 51961C)

Printed in Japan
WPC

CIRCUIT DIAGRAMS *SIGNAL INPUT & TALLY PWB CIRCUIT DIAGRAMS* [1/2]

SIGNAL INPUT PWB (1/2)
FX-6103B-H2

TALLY PWB FX-7019A-H2

SLOT PWB

CRT SOCKET PWB

note:
*1: 2SC2412K/QR/-X
*2: 2SA1037AK/QR/-X
*3: MA111-X
*4: DTC124EKA-X
*5: DTA124EKA-X
BW: BUS WIRE
X: NO PARTS MOUNTED

SIGNAL INPUT PWB CIRCUIT DIAGRAM [2/2]

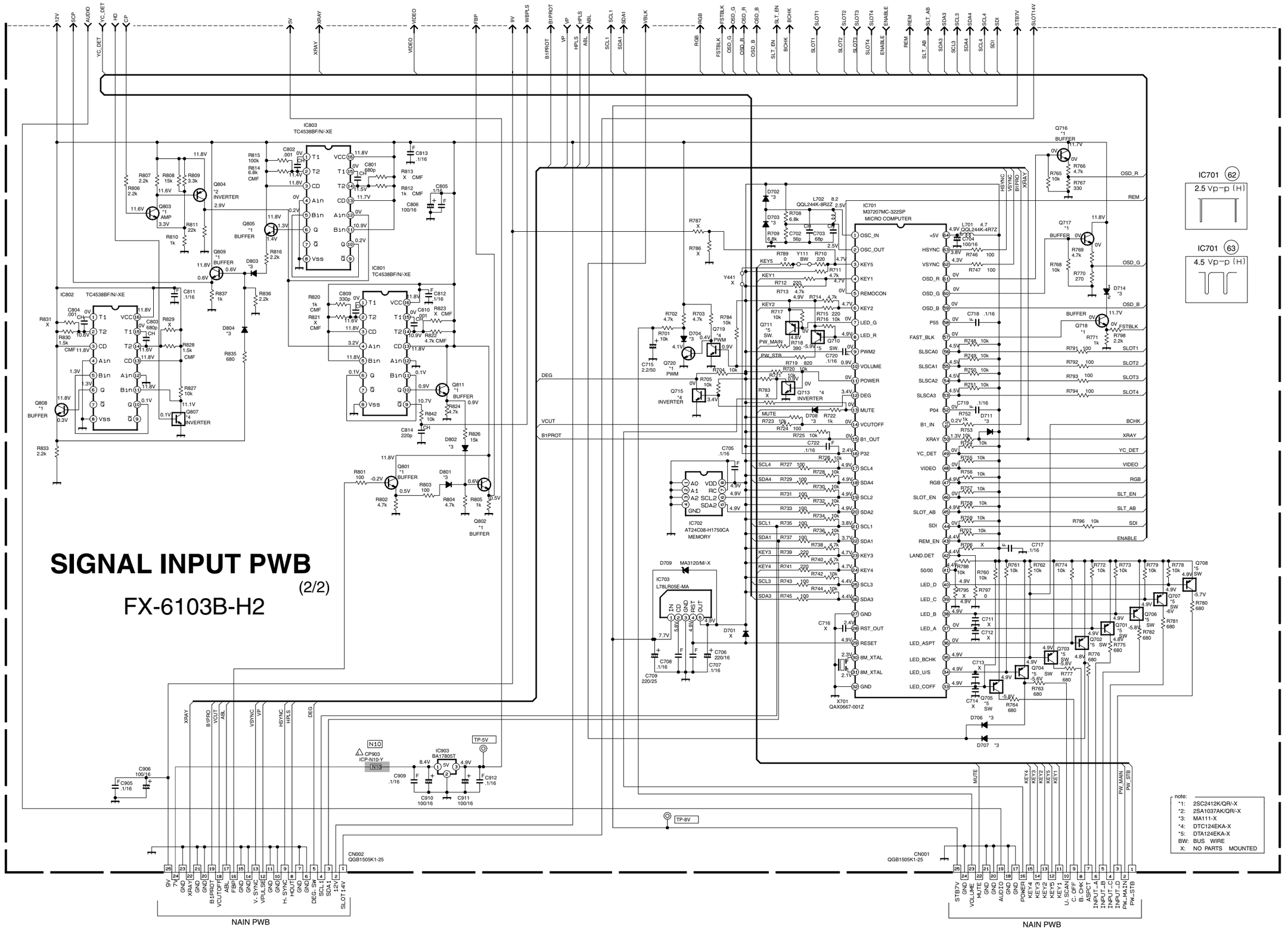

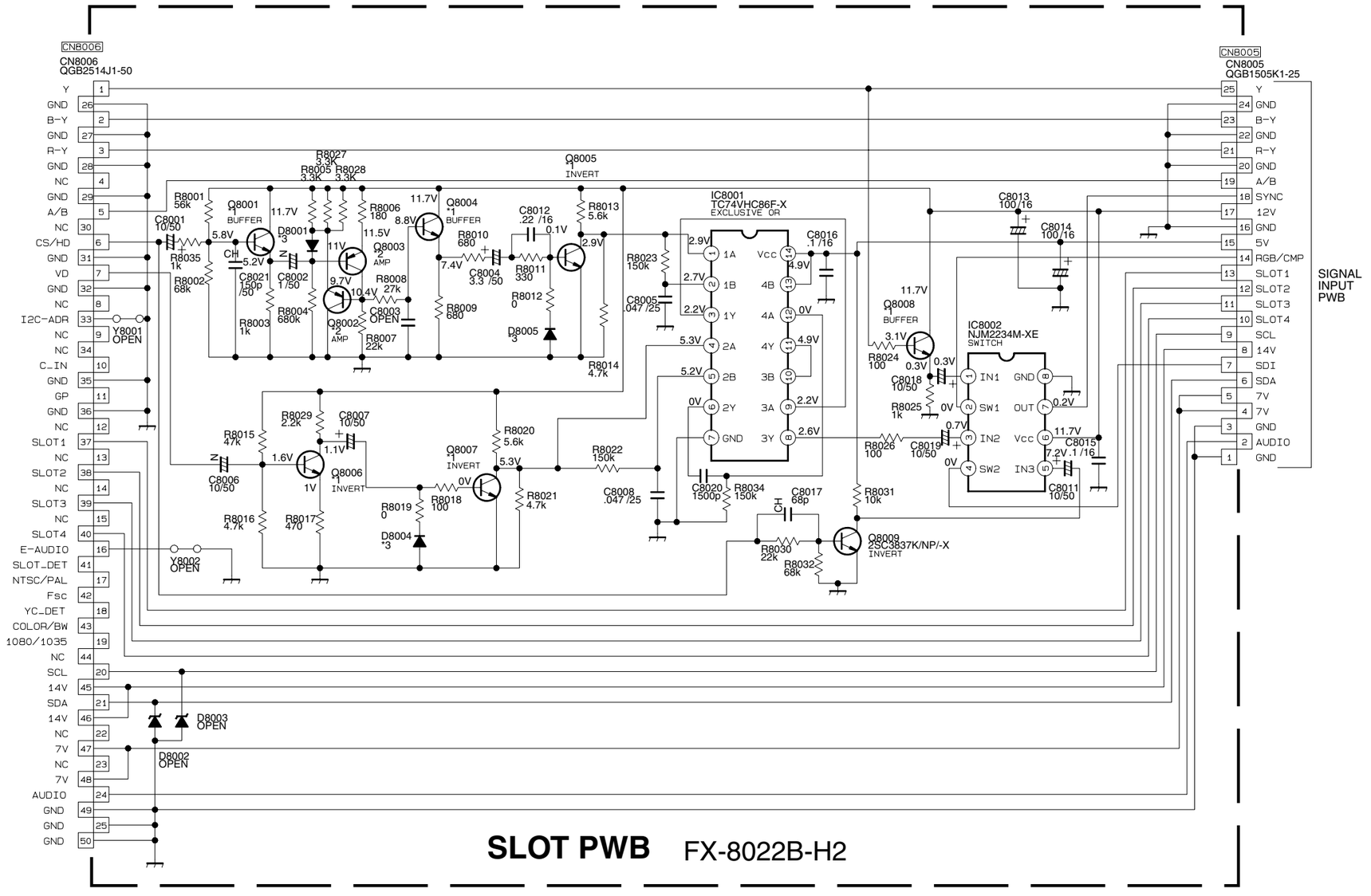
CN8006
CN8006
QGB2514J1-50
CN8005
CN8005
QGB1505K1-25
SIGNAL
INPUT
PWB
IC8001
TC74VHC86F-X
EXCLUSIVE OR
IC8002
NJM2234M-XE
SWITCH
Q8001
Q8002
Q8003
Q8004
Q8005
Q8006
Q8007
Q8008
Q8009
2SC3837K/NP/-X
INVERT
BUFFER
AMP
D8001
D8002
OPEN
D8003
OPEN
D8004
D8005
Y8001
OPEN
Y8002
OPEN
SLOT PWB FX-8022B-H2

TOP

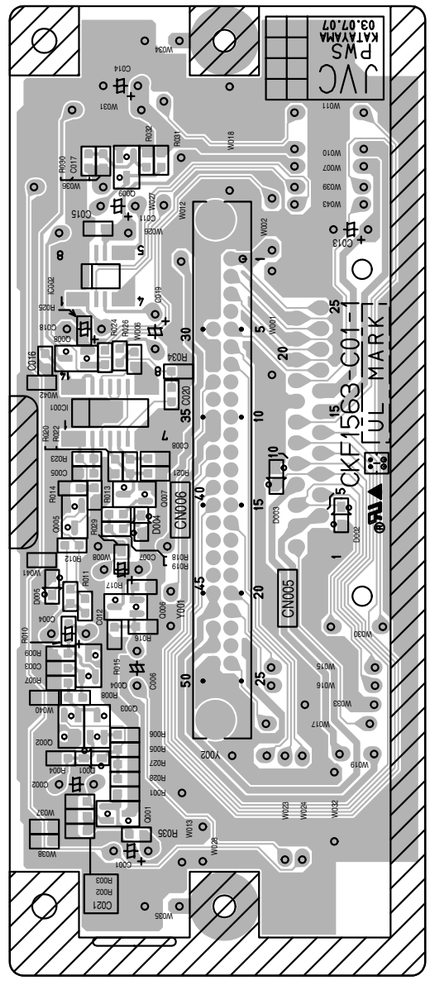
JVC
KATAYAMA
03.07.07
CKF1563-C01-1
CN005
CN006

SIGNAL INPUT PWB PATTERN

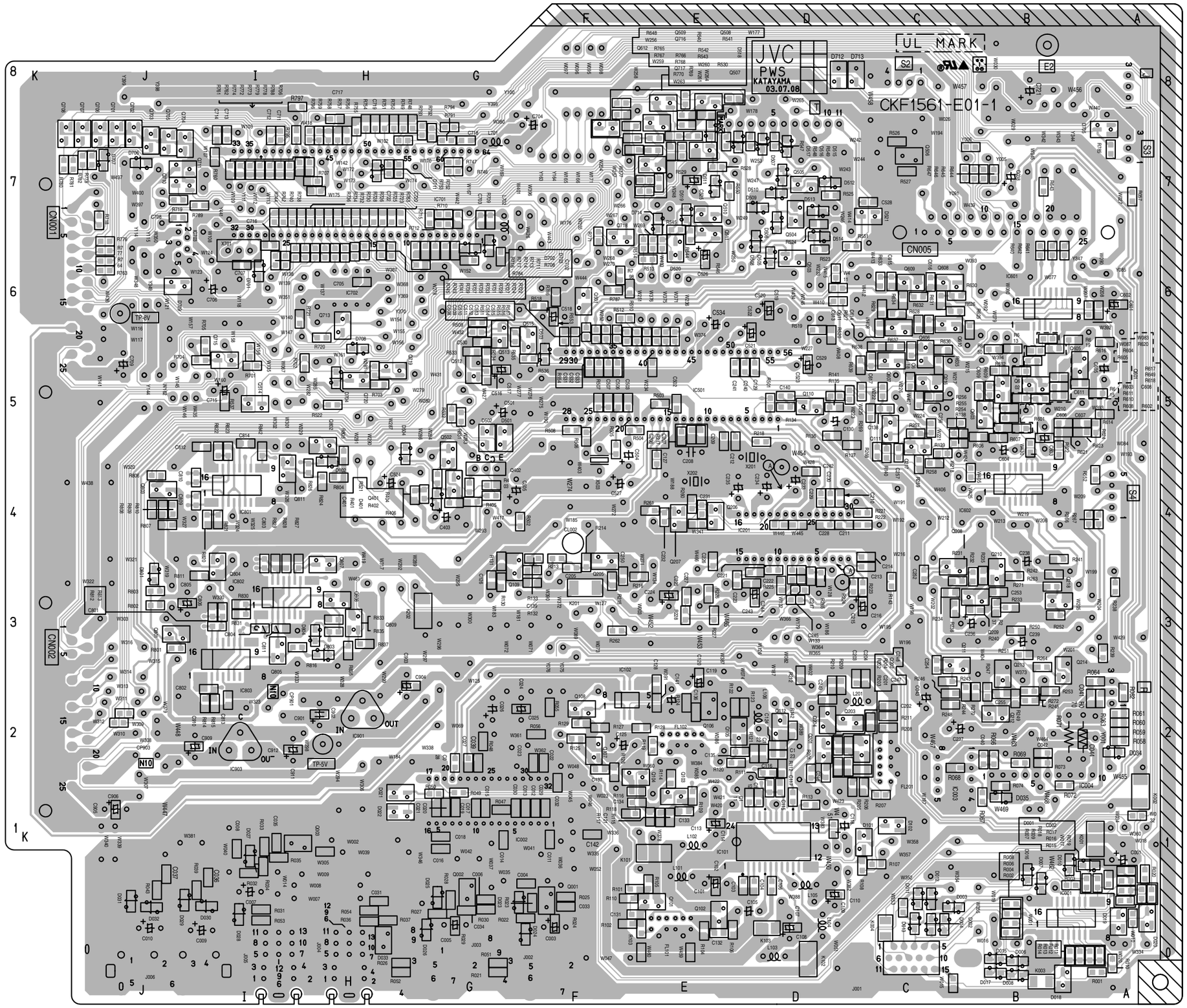

TOP

JVC

SERVICE MANUAL

COLOUR VIDEO MONITOR

TM-H1950CG/C, TM-H1950CG/E, TM-H1950CG/ER, TM-H1950CG/U

BASIC CHASSIS
S1

Supplementary

The transistor and diode of TM-H1950CG/C, TM-H1950CG/E, TM-H1950CG/ER and TM-H1950CG/U have been changed during the production.
Therefore, this service manual describes only the items which differ from those of the TM-H1950CG/C, TM-H1950CG/E, TM-H1950CG/ER and TM-H1950CG/U service manuals.
For details other than those described in this manual, please refer to the TM-H1950CG/E and TM-H1950CG/U service manuals (No.51961, 2002/6)(No.51961C, 2004/3), TM-H1950CG/C service manuals (No.51961B, 2003/5)(No.51961C, 2004/3), TM-H1950CG/ER service manual (No.51961D, 2006/3).

DIFFERENCE LIST

PRINTED WIRING BOARD PARTS LIST

MAIN P.W. BOARD ASS'Y

⚠	Ref. No.	Part No.		PART NAME	DESCRIPTION
		Before the change	After the change		
	Q1454	2SD1408/OY/-LB	2SD1267A/QP/	POWER TRANSISTOR	
	D1402	RD62E/B/-T2	MTZJ33B-T2	ZENER DIODE	
	D1410	---	MTZJ33B-T2	ZENER DIODE	(Addition)

NOTE:
- After replacing the Q1454, be sure to readjust the "H.SIZE" and "SIDE PIN".
- Please assemble D1402 and D1410, then insert to the location of D1402.(Fig.1)

SUB DEF P.W. BOARD ASS'Y

⚠	Ref. No.	Part No.		PART NAME	DESCRIPTION
		Before the change	After the change		
	D2523	BYD33G-T3	RGP10J-5025-T3	SI DIODE	

COPYRIGHT © 2007 Victor Company of Japan, Limited

PATTERN DIAGRAMS

MAIN PWB PATTERN

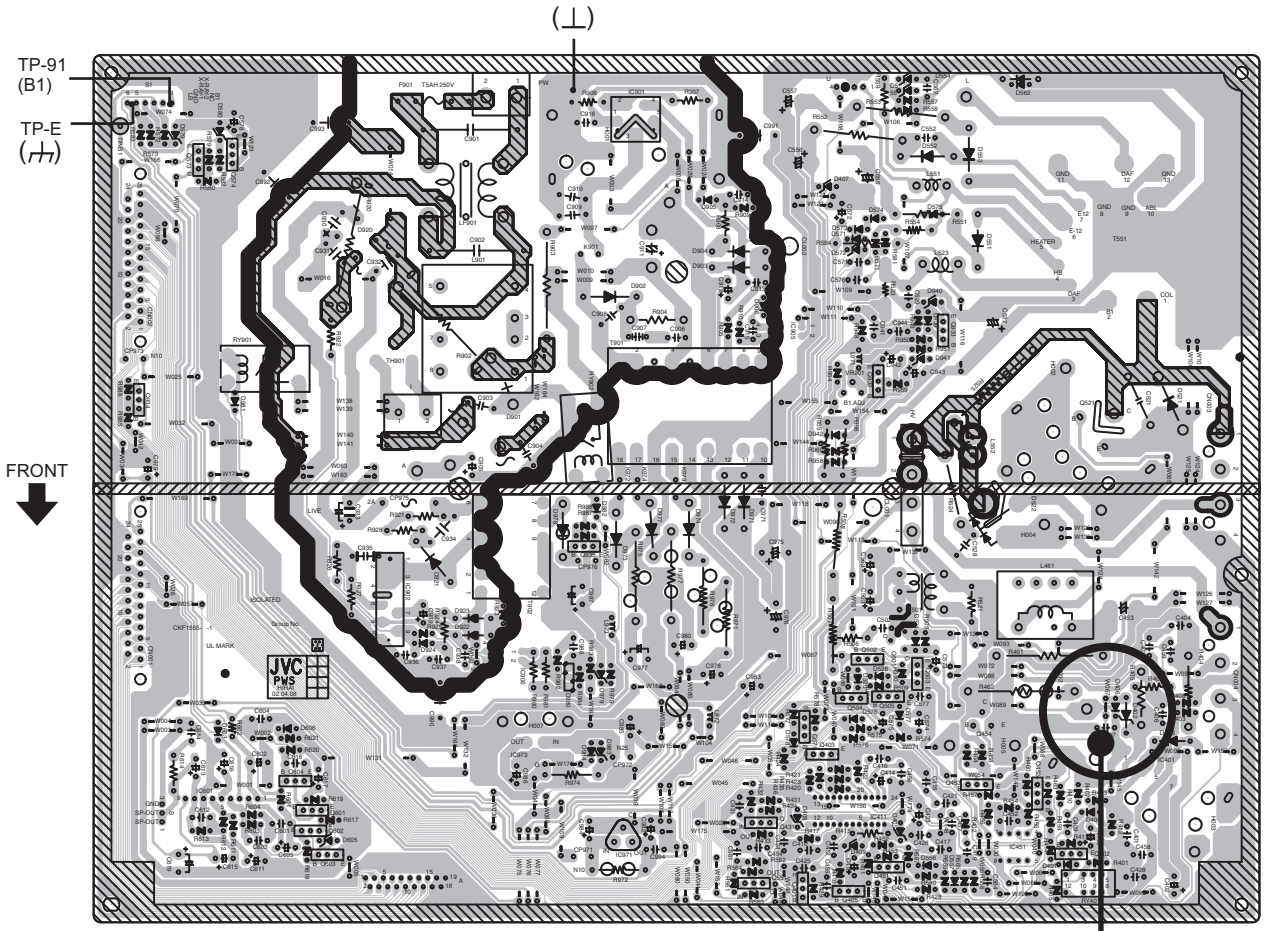

Before

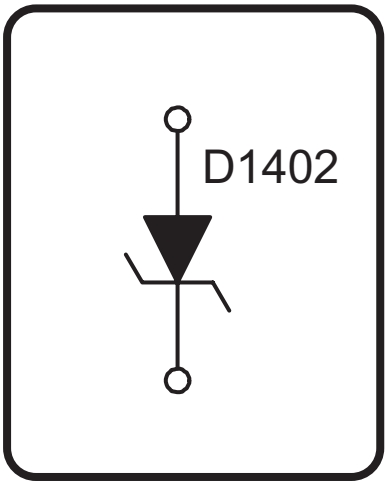

After

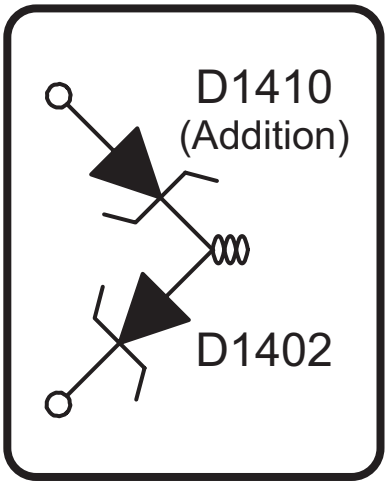

Fig.1

SECTION 1
PRECAUTION

Please refer to "TM-H1950CG/E and TM-H1950CG/U (No.51961)" about this section.

SECTION 2
SPECIFIC SERVICE INSTRUCTIONS

Please refer to "TM-H1950CG/E and TM-H1950CG/U (No.51961)" about this section.

SECTION 3
DISASSEMBLY

Please refer to "TM-H1950CG/E and TM-H1950CG/U (No.51961)" about this section.

SECTION 4
ADJUSTMENT

Please refer to "TM-H1950CG/E and TM-H1950CG/U (No.51961)" about this section.

SECTION 5
TROUBLESHOOTING

Please refer to "TM-H1950CG/E and TM-H1950CG/U (No.51961)" about this section.

JVC

Victor company of Japan, Limited
Display category 12, 3-chome, Moriya-cho, Kanagawa-ku, Yokohama-city, Kanagawa-prefecture, 221-8528, Japan

(No.51961E)

Printed in Japan
VPT